NO. 37 NOTES FROM THE SHOP $2.50

Woodsmith®

Woodsmith®

Number 37 **Jan/Feb, 1985**

Editor
Donald B. Peschke

Design Director
Ted Kralicek

Assistant Editors
Steve Krohmer
Douglas L. Hicks

Art Director
Kay Mulder

Technical Illustrators
David Kreyling
Mike Henry

Subscription Manager
Sandy J. Baum

Subscription Assistants
Christel Miner
Vicky Robinson
Jackie Stroud
Shirley Feltman
Diana Starr

Computer Operations
Ken Miner

Circulation Manager
Jeff Farris

Administrative Assistant
Cheryl Scott

Building Maintenance
Archie Krause

WOODSMITH (ISSN 0164-4114) is published bimonthly (January, March, May, July, September, November) by Woodsmith Publishing Co., 2200 Grand Ave., Des Moines, Iowa 50312.

WOODSMITH is a registered trademark of the Woodsmith Publishing Co.
©Copyright 1985 by Woodsmith Publishing Co. All Rights Reserved.

Subscriptions: One year (6 issues) $10, Two years (12 issues) $18. Single copy price, $2.50 (Canada and Foreign: add $2 per year.)
Change Of Address: Please be sure to include both your old and new address.
Second class postage paid at Des Moines, Iowa.
Postmaster: Send change of address notice, Form 3579, to Woodsmith Publishing Co., 2200 Grand Ave., Des Moines, Iowa 50312.

BACK ISSUES

All back issues of *Woodsmith* are still available. Send for a booklet describing the contents and prices of all back issues.

SAMPLE COPIES

If you have a friend who would like to see a copy of **Woodsmith**, just send the name and address, and we'll send a sample (at no cost).

Sawdust

ABOUT THIS ISSUE. It's part of the nature of woodworking to be intrigued by how things are built. Whether it be joinery, or hardware, or some obscure woodworking technique, there always seems to be something beneath the surface of a project to perk up my interest.

Having said that, it's probably no surprise if I admit that I'm sometimes more intrigued with the technique involved with building a project than the project itself.

This was certainly the case with the bathroom cabinet shown in this issue. In fact, I really didn't have a cabinet in mind when I started this project — I just wanted to build some louvered doors to see how they worked.

This seems to be a common affliction of woodworkers. A normal person would go to the store, buy a set of louvered doors and have the cabinet built in no time. But woodworkers tend to get more involved than that. There's the challenge of figuring out how things work, and how to build them — even if it takes all day just to make the jig to get the project started.

There's a similar story behind the T.V. trays. One of the problems I faced was how to fasten the tray to the leg assembly (to hold the legs open when the tray is being used). At first I thought I could get by with metal clips.

This was the easy solution — just go to the store and buy the clips. Well, the clips worked okay for a while, but soon they got bent and twisted out of shape. I decided it was time to replace them with some shop-made wooden catches.

The hard part was figuring out a simple way to make them. I slept on it, and eventually managed to come up with a nice little wooden catch that works just fine . . . another triumph of shop-made over store-bought.

COPYRIGHT. We frequently get letters asking if the projects shown in *Woodsmith* can be produced and sold — either to raise money at church bazaars or for profit at craft fairs.

The answer is yes. In fact, we're always happy to hear from woodworkers who were able to sell projects shown in *Woodsmith*.

If there's confusion in this area, it probably has to do with the copyright protection. This protects our rights to the text, photos and drawings for the projects. These cannot be reproduced or sold without our written consent.

INDEX. Bound in the center of this issue is a four-page Index to the projects, techniques and information shown in the first 36 issues of *Woodsmith* (No 1 through No. 36). I hope it makes finding information in the back issues a little easier.

PUBLISHER'S STATEMENT. Every year in the January/February issue of *Woodsmith*, we're required by the Post Office to print the Publisher's Statement shown below.

It basically shows that our circulation stands at about 197,000 (up from 151,000 last year). But these numbers are based on the September issue. With this issue, we've broken the 200,000 mark and stand at about 225,000.

NEXT MAILING. The March/April issue of *Woodsmith* will be mailed during the week of April 15, 1985.

STATEMENT OF OWNERSHIP, MANAGEMENT AND CIRCULATION

(Required by 39 U.S.C. 3685)

1. Title of Publication: Woodsmith. 1a. Publication No.: 01644114. 2. Date of Filing: October 1, 1984. 3. Frequency of issue: Bimonthly. 3a. No. of issues annually: six (6). 3b. Annual subscription price: $10.00. 4. Complete mailing address of known office of publication: 2200 Grand Avenue, Des Moines, (Polk County), Iowa 50312. 5. Complete mailing address of the headquarters of general business offices of the publisher: 2200 Grand Avenue, Des Moines, Iowa 50312. 6. Complete address of publisher, editor, and managing editor: Publisher: Donald B. Peschke, 2200 Grand Avenue, Des Moines, Iowa 50312, Editor: (same as publisher), Managing Editor (none). 7. Owner: Woodsmith Publishing Co., 2200 Grand Avenue, Des Moines, Iowa 50312; Donald B. Peschke, 2200 Grand Avenue, Des Moines, Iowa 50312; Theodore M. Kralicek, 2200 Grand Avenue, Des Moines, Iowa 50312. 8. Known bondholders, mortgagees, and other security holders owning 1 percent or more of total amount of bond, mortgages or other securities: None. 9. (does not apply) 10. Extent and nature of circulation:

	Average no. copies each issue during preceding 12 months	Actual no. copies of single issue published nearest to filing date (Sept., 1984)
A. Total no. copies printed (net press run)	191,934	215,023
B. Paid Circulation		
1. Sales through dealers and carriers, street vendors and counter sales	3,567	4,045
2. Mail subscriptions	176,166	192,983
C. Total paid circulation (Sum of 10B1 and 10B2)	179,733	197,028
D. Free distribution by mail, carrier or other means samples, complimentary, and other free copies	65	70
E. Total distribution (Sum of C and D)	179,798	197,098
F. Copies not distributed		
1. Office use, left over, unaccounted, spoiled after printing	12,046	17,828
2. Returns from news agents	90	97
G. Total (Sum of E, F1 and F2)	191,934	215,023

11. I certify that the statements made by me above are correct and complete. (signed) Donald B. Peschke, Publisher/Editor

Tips & Techniques

MACHINES ON WHEELS

Like many home woodworkers I have more tools than space. By mounting some of the larger machines on casters I'm able to roll them into position when I need them and out of the way when I don't. The problem was that I didn't want to work on machines raised up high on rolling or lock-down casters, and I couldn't easily adapt the expensive retractable casters to many of my large machines.

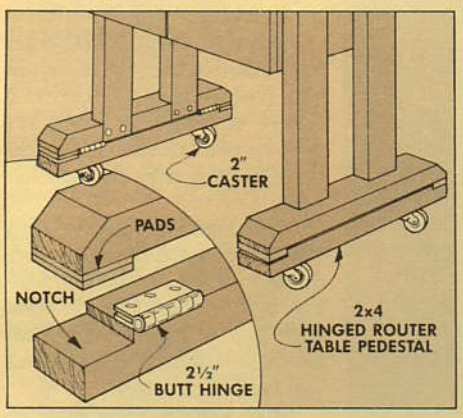

I designed a simple "flip-down" system that works great on my router table and could be adapted to other machines. I mounted 2" casters to two pieces of 2x4 and then hinged the 2x4's to the pedestals of the router table. When the table is in use the casters are kicked inward and the feet rest firmly on the ground.

I designed the system to fit on my *Woodsmith* router table that has ¼" plywood pads at the ends of the pedestals. But as I was mounting the hinges, I discovered that the thickness of the hinge knuckle has to be less than the thickness of the pads or the table will rest on the hinges. Since the 2½" butt hinges I used were too thick, I added an extra piece of ¼" plywood to each of the pads to allow clearance.

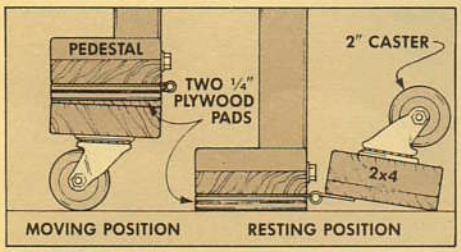

Before the 2x4's are mounted, wide notches are cut on both ends. This allows the 2x4's to clear the pedestal pads when they're flipped into position.

Harold S. Bourgoin
Bellevue, Washington

DRILLING JIG IMPROVED

It was a great help to use the angled drilling jig (*Woodsmith* No. 35, page 22) to drill the slanted pockets for the wing struts in the biplane. But I found it even easier when I made a modification on the jig.

One of the problems I noticed was that the small wooden block between the two pieces of plywood tended to slip and move around. By the time I measured the correct distance between the two pieces of plywood, inserted the small block, and then correctly positioned my workpiece on top, the block would move.

I solved the problem by cutting a ¾"-wide dado in the base piece of plywood before attaching the hinges. I then cut a new longer block that would fit tightly into the dado but could still be removed.

I also marked distances on the block that would indicate commonly used angles.

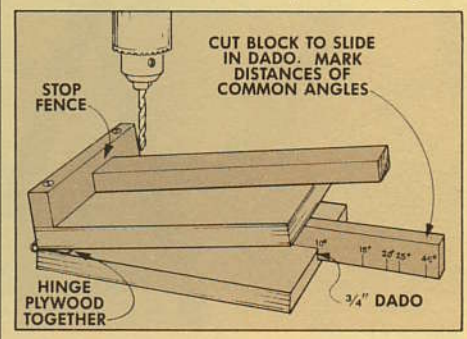

This saved the often inaccurate job of measuring the height between the two plywood pieces at a specific indexing point.

Robert K. Graul
Alton, Illinois

COLOR CODING

While I'm adjusting equipment in the shop, I've always found it frustrating to grab the wrong wrench. I've solved the problem by using a color coding system.

I bought a variety of small bottles of bright colored enamel at a hobby shop. Then I color-coded the nuts and bolts by size to match the color painted on the same size wrench. For example, the ½" wrench has a red stripe on it and all the ½" nuts and bolts on my machines have a red dot on them.

This method is especially useful if you have more than one size chuck key or router wrench in the shop. The few minutes it takes to paint on the stripes and dots saves time and frustration later.

L.D. Fredrick
Aspen, Colorado

LOCATING HINGES

I recently finished building some cabinets that had a number of flush-mounted doors. At first I couldn't figure out how to get the hinges lined up properly. After placing the hinges on a door, it seemed like I needed to hold it at the correct position and then

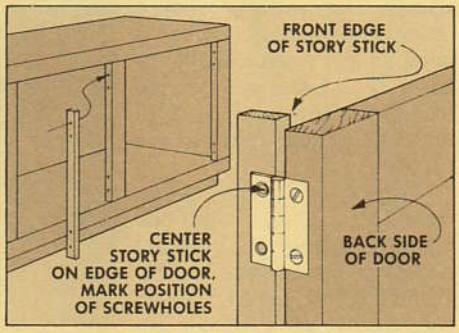

crawl inside the cabinet to mark the location of the hinges on the cabinet stile. I finally came up with this simple method that is helpful when mounting a number of doors.

First, I mounted the hinges in the correct location on the edge of a door. Then I made a story stick out of a piece of ¼" thick scrap. I cut it as long as the height of the door opening and as wide as the door thickness.

Next, I centered the strip alongside the edge of the door and flipped the hinges over onto it. I carefully marked the location of all the screwholes in the hinges onto the strip. Then I drilled holes *all the way through* the ¼" strip at these points.

After drilling through the strips it was simply a matter of holding the strip (rather than the door) up against the stile and punching through the holes to mark the stile. Finally, I drilled at the punch points and mounted the door in place.

Using the other side of the same template, I was able to mark the opposite cabinet stile as long as the hinges on that door were in the same location.

George P. Seifert
Shoreview, Minnesota

SEND IN YOUR IDEAS

If you'd like to share a woodworking tip with other readers of *Woodsmith*, send your idea to: *Woodsmith*, Tips & Techniques, 2200 Grand Ave., Des Moines, Iowa 50312.

We pay a minimum of $10 for tips, and $15 or more for special techniques (that are accepted for publication). Please give a complete explanation of your idea. If a sketch is needed, send it along; we'll draw a new one.

T.V. Trays

A NEW DESIGN FOR AN OLD FRIEND

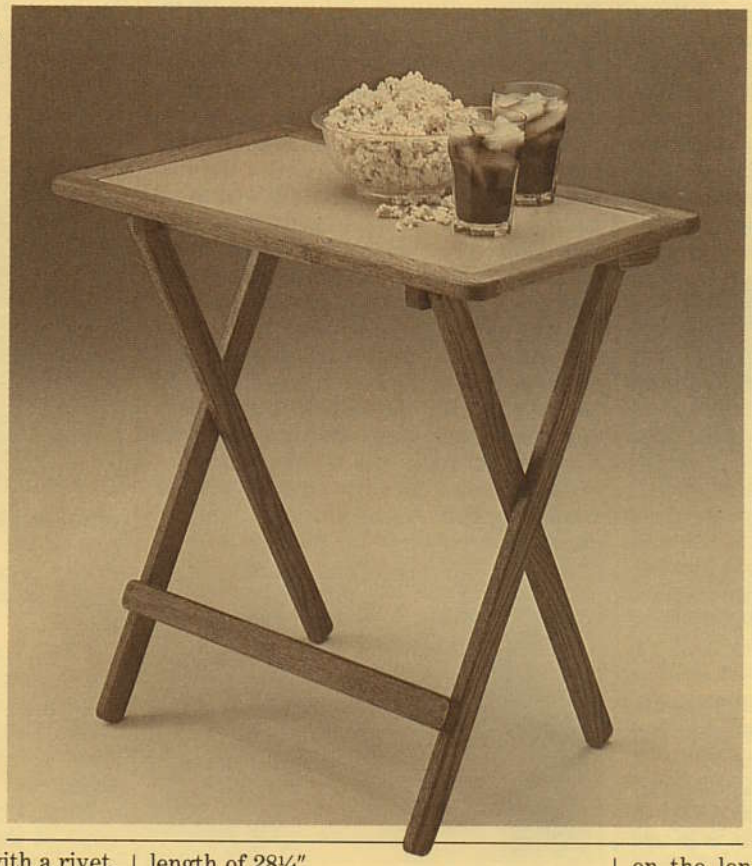

The other day I was at a local discount store and saw a set of "solid wood" T.V. trays. They looked like what you'd expect from a discount store, but I wanted to see if they were sturdy. They're not. When I touched the one on display, it wiggled like a duck at dinner time. Then I began to wiggle when I saw the price tag: $240 for a set of four trays and a stand.

That's when I decided it was time to go ahead with our plans to update the original design we ran in issue No. 16. When the first set of T.V. trays was built, we used an arrangement of dowels and wooden nuts to work as a pivot so the legs could scissor open. This system works, but I always wished there was an easier way.

Then about a year ago, I learned about a new type of hinge that I thought would be ideal for T.V. trays. It's called a Roto-Hinge, see Fig. 1.

This is actually a very simple device that's just two wooden drums held together with a rivet. (Note: These hinges work well, but they're a little loose. A couple of healthy taps on the rivet will tighten it up.)

THE LEGS

I ordered the Roto-Hinges first (see Sources, p. 24), and then started work on the legs. First, rip the four legs (A) for each tray 1½" wide and cut them to a length of 28¼".

This length for the legs will make the tray about 26" off the floor, which is an "in between" height. It's a little low if the tray is used when sitting in a chair, and it's a little high for use when sitting on a couch, but a good compromise overall.

ROUND ENDS. After the legs are cut to length, the four corners of each leg are rounded to a radius of ½", see Detail in Fig. 3. To do this, I used a quarter (25¢) to draw the radius. Then I sanded the corners to shape on a disc sander.

Next, all the edges on both sides of the legs are chamfered. The easiest way to do this is on a router table using a chamfer bit with pilot. (Note: An option is to round over all the edges with a ¼" corner round bit. This can be done anywhere the project calls for a chamfer.)

MATCH UP LEGS. Next, holes are drilled in the legs to mount the Roto-Hinges. However, before drilling the holes, it's best to pair up the legs to determine how they fit together best.

If the legs are warped, they should be matched so the warp doesn't interfere with the folding action, see Fig. 2. Test each pair of legs for the best action and mark the sides that will face each other.

DRILL HOLES. Now drill ¾" holes on the marked sides for the Roto-Hinges, refer to Fig. 4. These holes are located 12" down from the top of each leg, see Side View in Fig. 3. Note: These holes are *not* centered on the length of the legs. I wanted to provide a little wider stance at the bottom of the legs, so the hinge (pivot point) is shifted up a little.

HOLES AT TOP OF LEGS. There are also holes at the top of each leg. On the *outside* legs, drill a ¾" hole centered ⅝" from the top for another Roto-Hinge (that's used to join the outside leg to a pivot block, see Fig. 5). Finally, at the top of the *inside* legs, a ⅝" hole is drilled for the crossbar, see Fig. 3.

MATERIALS LIST

Overall Dimensions: 23¾"w x 16"d x 26"h		
A	Legs (4)	13/16 x 1½ - 28¼
B	Stretcher (1)	13/16 x 1½ - 19⅛
C	Crossbar (1)	⅝ - 16½
D	Pivot Blocks (2)	13/16 x 1½ - 3
E	Frame Stiles (2)	13/16 x 1½ - 13¾
F	Frame Rails (2)	13/16 x 1½ - 23¾
G	Plywood (1)	½ x 13¾ - 21½
H	Formica (2)	13¾ - 21½
I	Wooden Catch (2)	13/16 x 1½ - 3

CUTTING DIAGRAM

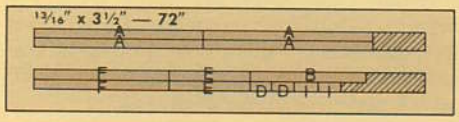

FIGURE 1

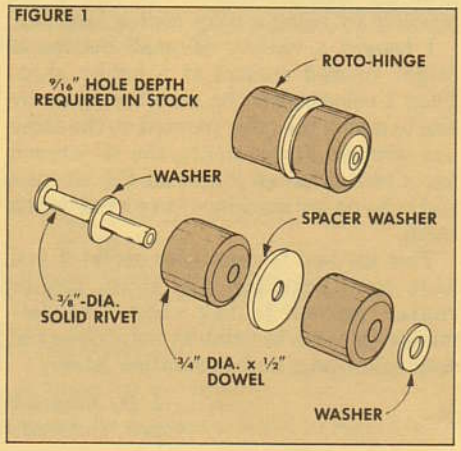

FIGURE 2

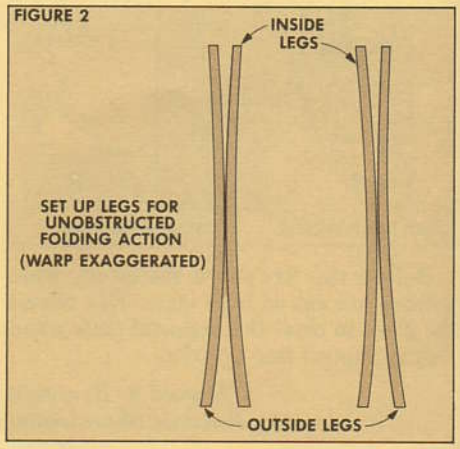

PIVOT BLOCK. Now pivot blocks (D) are needed to join the legs to the tray. To make these blocks, first cut two pieces 1½" wide by 3" long, see Fig. 6. Then drill a ¾" hole for the Roto-Hinge, centered on the length and width of the block.

Next, counterbore ⅜"-dia. holes in the pivot blocks, and follow with 3/16"-dia. shank holes. (Note: Check the depth of the counterbore so 1½"-long screws extend only ⅜" into the ½" plywood tray top.) After the holes are drilled round the corners to a ¼" radius, see Step 3 in Fig. 6.

MOUNT ROTO-HINGES. Before mounting the Roto-Hinges, finish sand the legs (especially the inside faces where it will be difficult to get to after the legs are joined). Then glue Roto-Hinges into the holes to join the two legs. Also, glue Roto-Hinges in place to join the pivot blocks to the outside legs.

MOUNT CROSSBAR. Now the crossbar (C) can be mounted. Cut a ⅝"-dia. dowel to fit in the holes in the inside legs. This dowel should be cut to length so when it's in place, the inside legs are 15¾" apart, see Fig. 7. (If the holes are ⅜" deep, the dowel should be 16½" long.)

STRETCHER. The last step on the leg assembly is to add a stretcher (B), see Fig. 7. Rip the stretcher 1½" wide and to rough length (about 20" long).

To determine the final length of the stretcher, lay the leg assembly down as shown in Fig. 7. Then measure the distance between the outside of the outside legs. Note: Take this measurement at the top of the leg assembly (where the dowel is). Then cut the stretcher to length so it equals this measurement.

To complete the stretcher, round the corners to a ¼" radius and chamfer (or round over) the edges on both sides, see Detail in Fig. 8. Then to mount the stretcher to the legs, counterbore holes at the ends of the stretcher for No. 8 x 1½" woodscrews, see Fig. 8.

After the stretcher is glued and screwed to the legs, fill the counterbores with plugs, sanding them smooth with the surface of the stretcher.

FIGURE 3

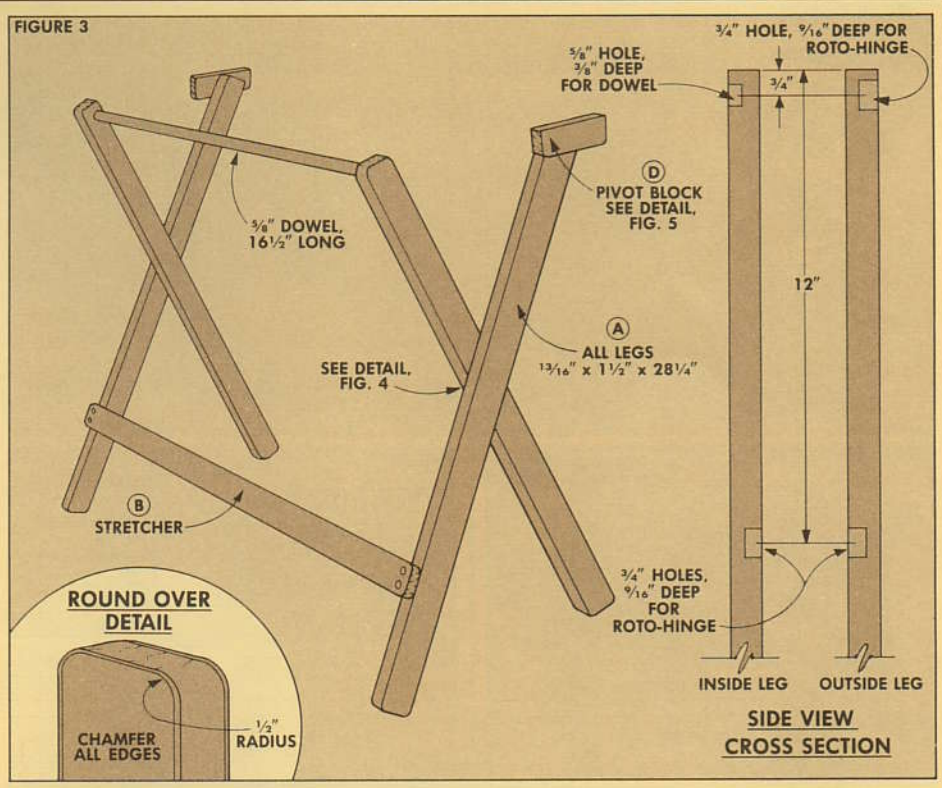

FIGURE 4

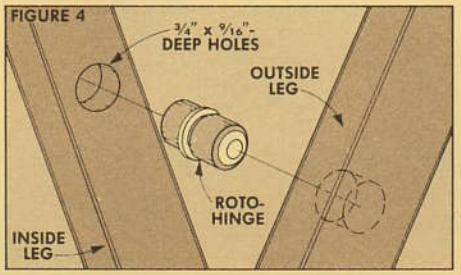

FIGURE 5

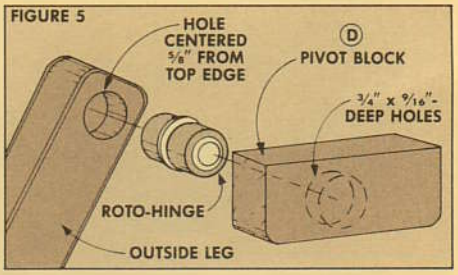

FIGURE 6

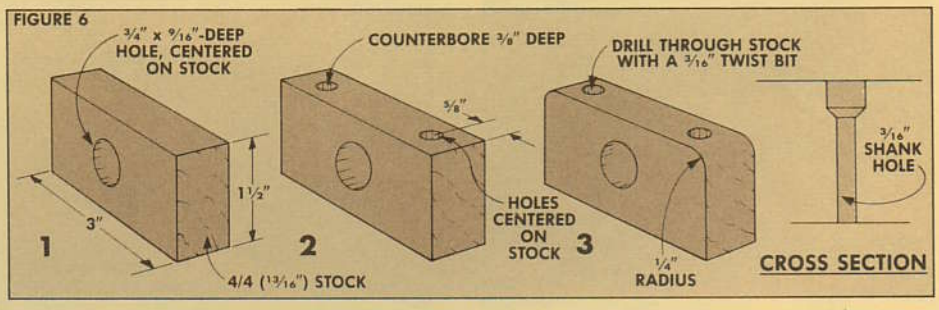

FIGURE 7

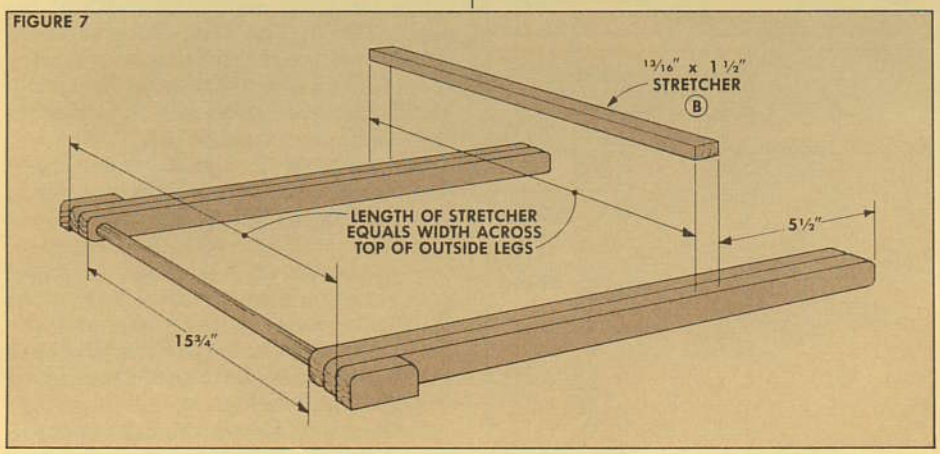

FIGURE 8

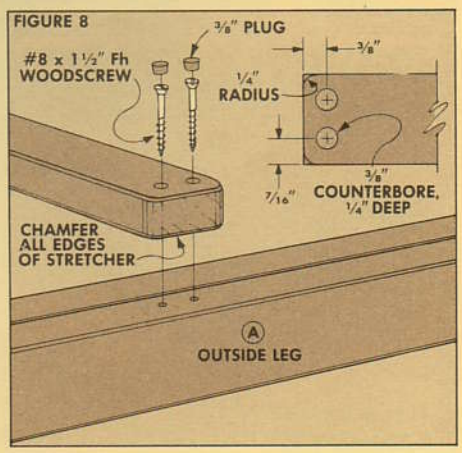

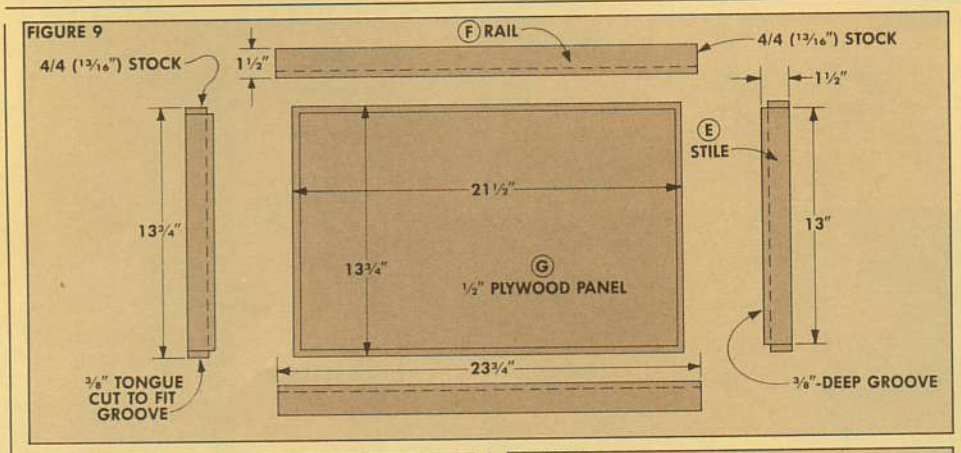

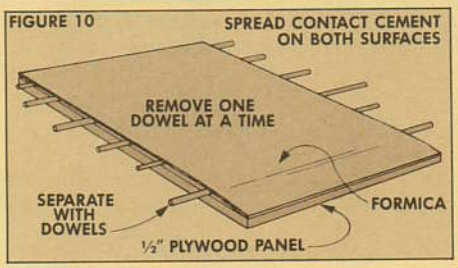

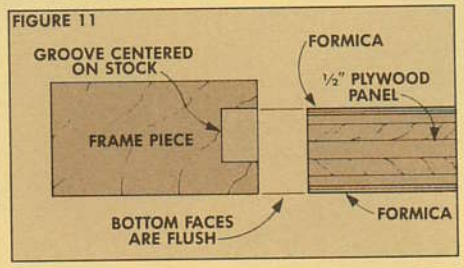

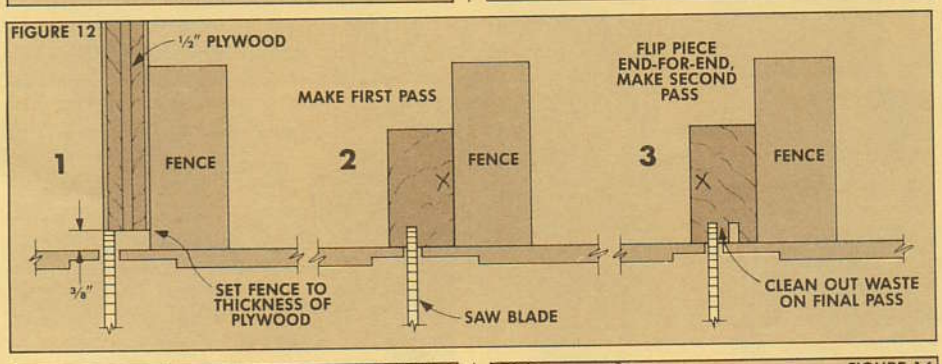

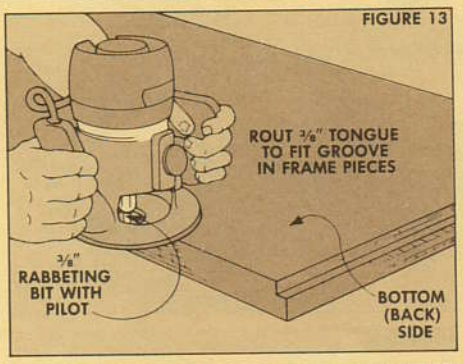

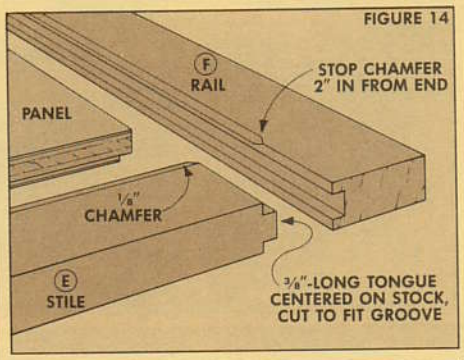

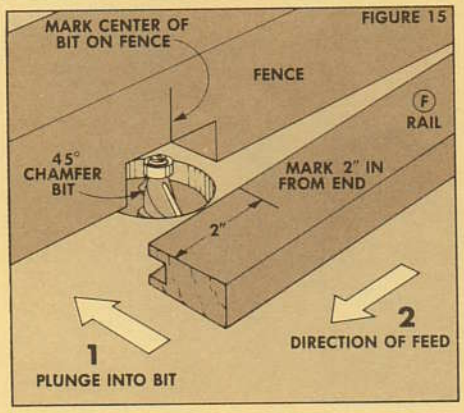

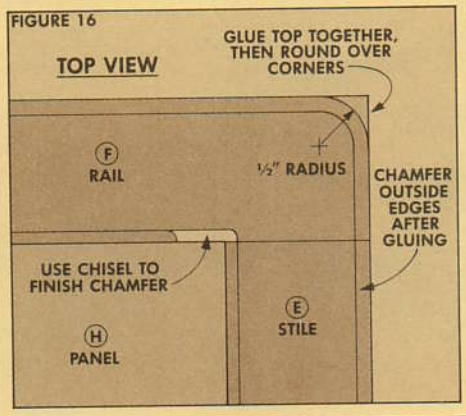

THE TRAY TOP

After the legs are built, all that's needed is a tray top. The one shown in the photo is an oak frame with the Formica panel. To make the tray, I started with the panel.

The panel is a piece of ½" A/C plywood with Formica laminated to both sides. Cut the plywood (G) and the Formica (H) oversize (at least ½" larger in both directions) to allow for trimming.

LAMINATE THE FORMICA. Then laminate the Formica to the plywood by spreading contact cement on both surfaces. When the cement is dry to the touch, place dowels along the plywood (see Fig. 10), and align the Formica at one end of the plywood. Then remove one dowel at a time, pressing the Formica down as you go.

Shop Note: The bottom of the plywood must also be covered with Formica. If only one side is covered, moisture from the air can still penetrate the exposed plywood side, and the panel will warp.

CUT FRAME PIECES. Now the frame pieces can be cut to rough size. Rip the rails (F) and stiles (E) to a width of 1½", and cut them to rough length (about ½" longer than shown in Fig. 9).

CUT GROOVES. Next, grooves are cut on the edges of the frame pieces to accept the panel, refer to Fig. 11. To set up this cut, use the Formica-covered panel to adjust the distance between the fence and the outside of the blade, see Fig. 12.

Set the depth of cut to ⅜" and make a pass on each frame piece, see Step 2. Then flip the piece around so the other face is against the fence, and make another pass on all pieces, see Step 3. Finally, adjust the fence to clean out the waste left between the first two cuts.

RABBET FORMICA. After the grooves are cut, go back to work on the panel. First, trim the panel to final size, see Fig. 9. Then rabbet the back (bottom) side with a ⅜" rabbeting bit, see Fig. 13. Sneak up on the depth of cut so the remaining tongue fits snugly in the grooves in the frame.

CUT TO LENGTH. Now the frame pieces can be cut to final length. The stiles (E) are cut to length to match the width of the panel (13¾"). The rails (F) are cut to length to match the distance between the shoulders of the rabbets on the panel (20¾") plus the width of the two stiles (1½" each), for a total of 23¾".

CUT TONGUES. To join the frame members, cut rabbets at the ends of the stiles to produce tongues that fit the grooves, see Fig. 14.

CHAMFER EDGES. Next, I cut a chamfer on the inside edges of the frame to ease the transition between the panel and the frame. This chamfer is cut along the entire length of the stiles, but must be stopped on the rails, refer to Fig. 14.

To make the stopped cut, mark a point 2"

from both ends of the rail, see Fig. 15. Then cut the chamfer on a router table so the cuts start and stop on these marks.

ASSEMBLE FRAME. Now, the frame pieces can be glued and clamped to the panel. After the glue is dry, complete the last ½" of the chamfer on the inside edge of the frame with a sharp chisel, see Fig. 16. Then round the outside corners to a ½" radius, and chamfer (or round over) the outside edges of the frame.

ATTACH TRAY TOP TO LEGS

At last, the tray top can be attached to the legs. To do this, lay the leg assembly on the tray and position it so the pivot blocks (D) are equal distance from the side edges of the frame, and 1¼" from the front edge, see Fig. 17. Then drill pilot holes and screw the pivot blocks in place.

WOODEN CATCH. To hook the crossbar in place, I made two wooden catches (I), see Fig. 19. Drill three ⅝" holes in each block, and cut out the shape of the catch with a coping saw or on a bandsaw.

To mount these catches, position them so they're about 1/16" from the inside legs (to allow for clearance) and 1⅝" from the back edge of the tray frame, and screw them in place, see Fig. 18.

FINISHING. To finish these T.V. trays, I applied two coats of Watco medium walnut to both stain and seal the wooden parts.

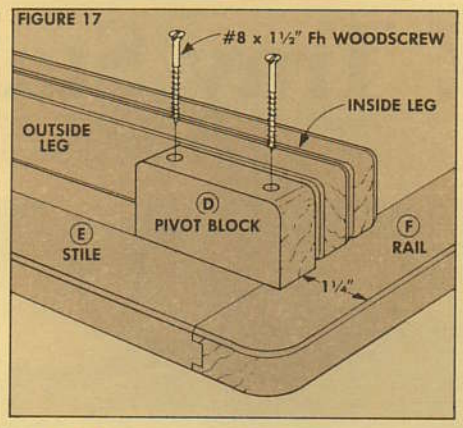

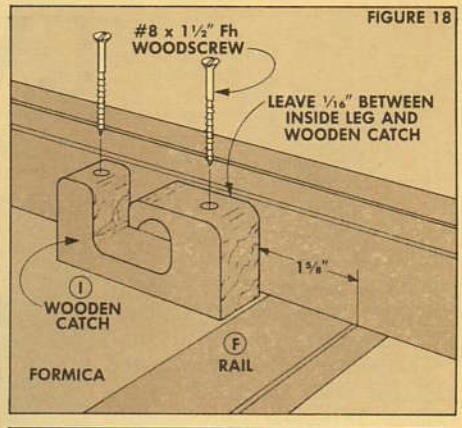

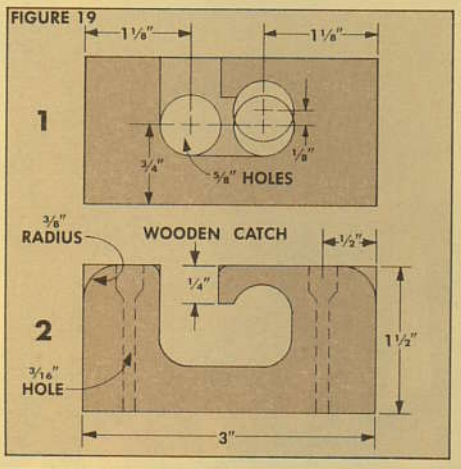

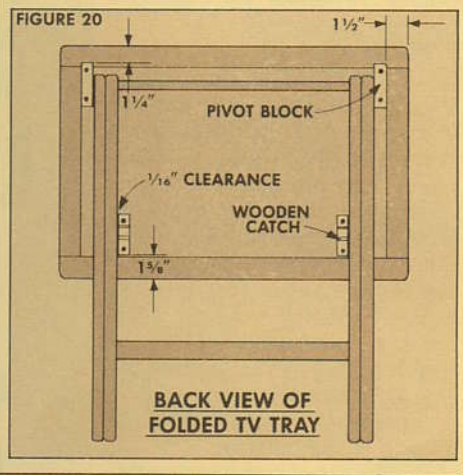

T-MOLDING ... *for a plywood top.*

We also tried another version of the tray top using ¾" oak plywood with plastic T-molding to cover the edges. To make this panel, cut the plywood 23¾" long by 16" wide, and round the corners to a 1" radius, see Fig. 1. Then rout a slot around the perimeter of the plywood with a 1/16" slot cutter, see Fig. 2.

APPLY T-MOLDING. To apply the T-molding, cut it to rough length (about 1" longer than the perimeter of the plywood). Then, before the adhesive is applied, lay out the corners. To do this, press the molding in the slot, starting at the middle of one of the long sides. When you get to a corner, cut out "V" notches so the molding bends easier, see Fig. 3.

When all four corners are cut, pull the molding out of the slot, and spread vinyl-based adhesive in the slot and to the edge of the plywood. Then press the molding back in place.

JOIN THE ENDS. There's a neat little trick to making a clean joint where the two ends meet. Lift up the trailing end and trim back the section of the T-molding that fits into the groove so it's flush with the starting end, see Figs. 4 and 5. Then with a sharp knife, cut through both layers of the over-lapping molding to yield a clean joint, see Fig. 6.

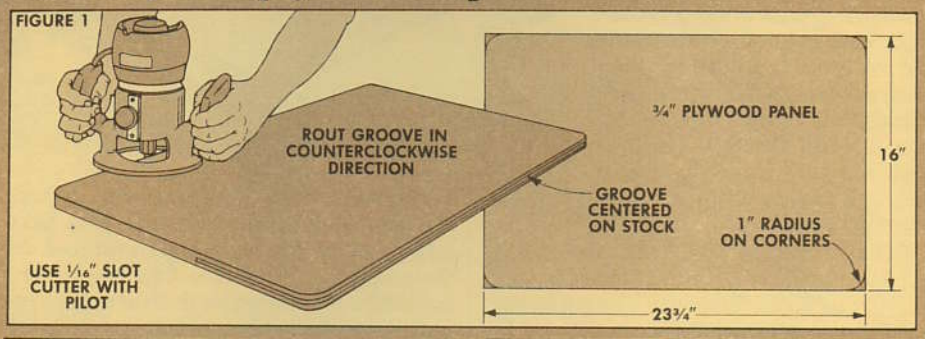

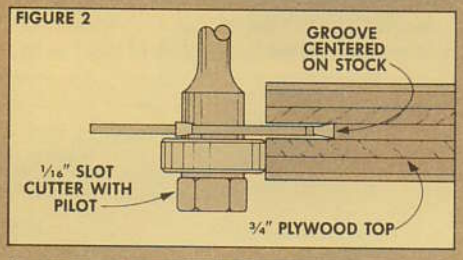

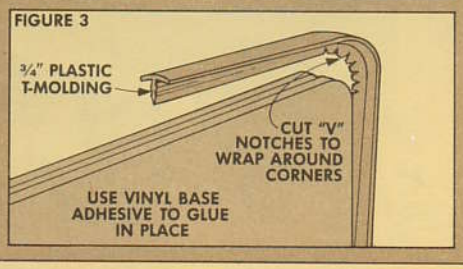

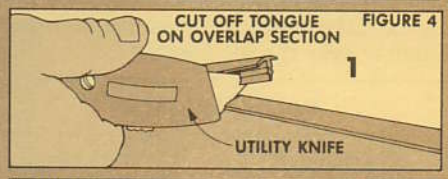

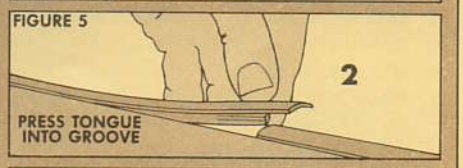

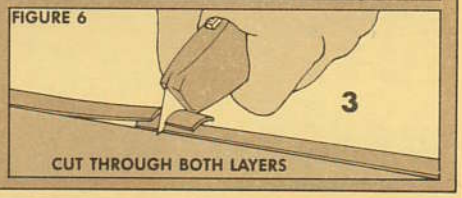

T.V. Tray Stand

ROLL-AROUND STORAGE

We thought it would be nice to have a stand to hold a set of four T.V. trays. And because of the weight of four trays (it adds up quickly), we designed the stand with casters.

This stand is a giant inverted "T" that holds the trays lean-to fashion. To build it, I started with the base pieces.

THE BASES. Each base consists of two pieces (A) laminated together, see Fig. 1. First cut four pieces of 4/4 stock to rough size, 2⅝" wide by 23" long. (These pieces start out oversize to provide some room for trimming after they're laminated.)

NOTCHES. Now lay out the position of the notches that hold the ends of the tray tables. First mark a line centered on the length of two of the boards, see Fig. 1. Then mark the location of four pairs of ⅝" holes to form the corners of the notches.

Working from the centerline out, mark the centerpoints of the holes for the first pair of notches so the first hole is centered 4½" from each side of the centerline and ½" down from the top edge. Then the second hole of the pair is marked 1⅛" away. For the outside notches the first holes are centered 7¾" from the centerline, and the second holes of the pair are also 1⅛" away.

CUT OUT NOTCH. After the positions of the holes are marked on both boards, drill the ⅝"-dia. holes. Then use a sabre saw or band saw to cut the notches to shape. Finally, sand the edges of the notches smooth, rounding over the top corners.

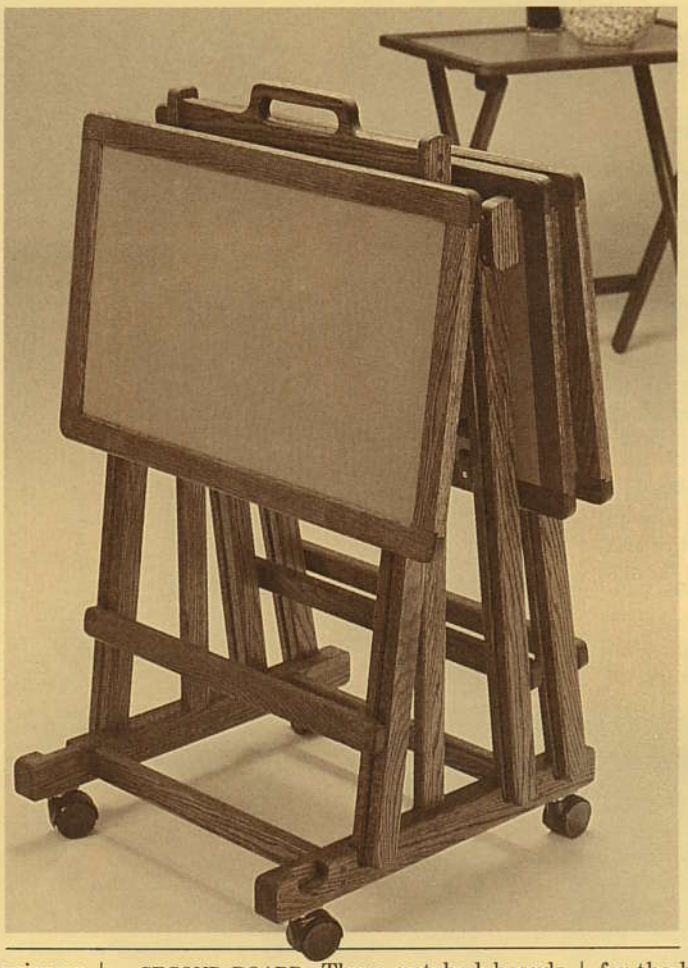

SECOND BOARD. These notched boards are laminated to second boards that have large dadoes (or lap joints) centered on their length. (When the two boards are laminated together, this dado actually creates a mortise for the upright, see Fig. 1.)

Mark the position of this 1½"-wide dado so it's centered on the length of the board. Then cut it by making multiple passes over the sawblade.

LAMINATE THE BASE. Now the boards can be glued and clamped together to form the bases. As the clamps are tightened, the pieces may slip around a little — but try to keep the top edges and the ends aligned.

When the glue is dry (overnight), cut the laminated pair to final size by trimming off the bottom edge and both ends. Then to complete the bases, round the corners to a ½" radius, and chamfer all edges on a router table.

THE BASE STRETCHERS. The bases are joined to two stretchers (B). Cut these base stretchers 1½" wide and to rough length (15"). Then determine the final length by placing one of the T.V. tray leg assemblies in the notches of the bases, see Fig. 2. Measure the distance between the inside faces of the bases, subtract ⅛" for clearance, and cut the stretchers to this final length.

HANDLE AND STRETCHER. Next, to join the uprights, the handle (C) and middle stretcher (D) are cut to width (see Fig. 3), and both pieces are cut to the same length as the base stretchers (B).

THE HANDLE. After the blank for the handle is cut to size, drill holes to mark the shape of the hand-hold, see Fig. 3. Then cut out the shape with sabre saw, and sand the edges smooth. Finally, chamfer (or round over) the top and bottom edges of the handle and the hand-hold.

THE UPRIGHTS. The last pieces to cut for the stand are the uprights (E). The up-

MATERIALS LIST

A	Base Pieces (4)	13/16 x 2½ - 21¼
B	Base Stretchers (2)	13/16 x 1½ - 14
C	Handle (1)	13/16 x 3 - 14
D	Middle Stretcher (1)	13/16 x 1½ - 14
E	Uprights (2)	13/16 x 1½ - 33¼

CUTTING DIAGRAM

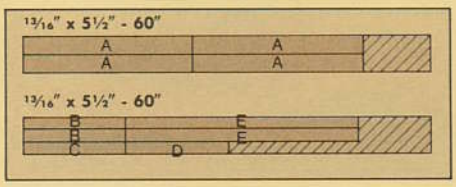

FIGURE 1

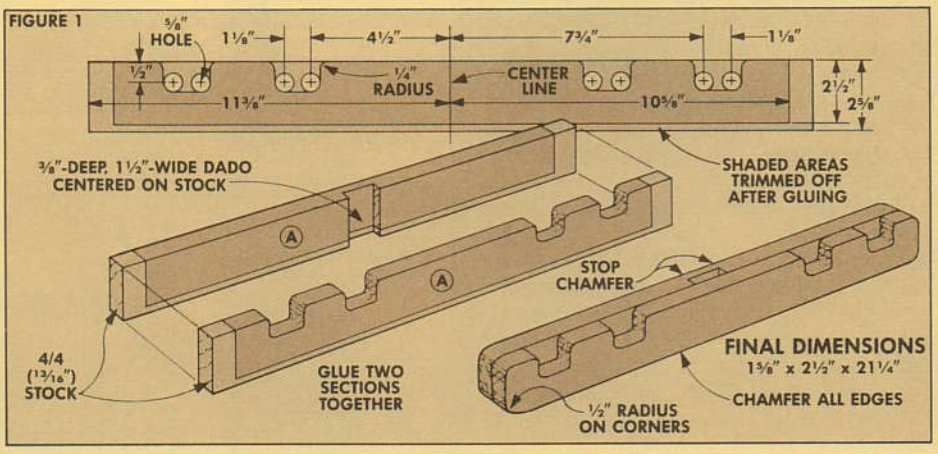

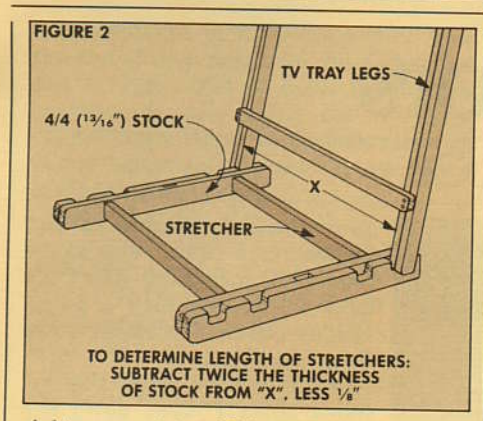

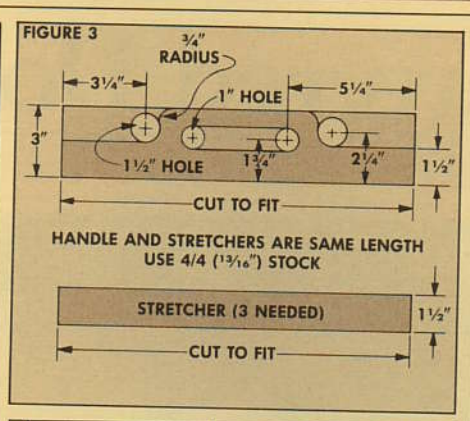

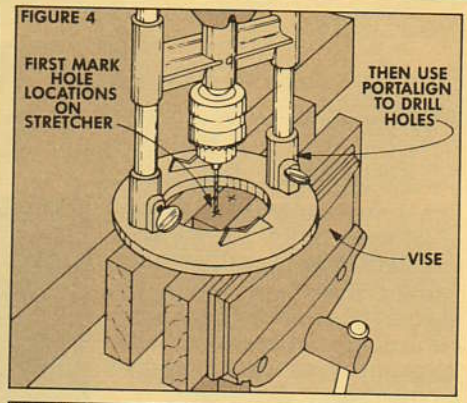

rights are cut to width (1½") to match the width of the dado (mortise) in the base, refer to Detail B in Fig. 7.

Cut them to a length of 33¼", and then cut half-laps on the bottom ends to fit the mortises. To complete the uprights, round the top corners to ½" radius and chamfer the edges, stopping at the shoulder of the half-lap on the bottom end.

ASSEMBLY

Now that all the pieces are cut to final size, they can be assembled. I did this by gluing and screwing them together.

The only problem here is drilling the pilot holes for the screws exactly where you want them. Since there's no easy way to clamp the pieces together to drill the pilot holes, I made a drilling gauge to mark the position of the holes.

THE GAUGE. To make the gauge, cut a piece of 4/4 scrap to the same width as the handle and stretchers (1½" wide), see Fig. 5. Then mark two holes centered ⅜" from the edges of the stock. Drill ¼" holes at these points with a Portalign, see Fig. 4. Now cut off the end of the scrap piece to produce the gauge.

MARK PILOT HOLES. To mark the position of the pilot holes on the base, center the block between the two notches, and equal distance (½") from the top and bottom edges, see Fig. 5. Then use an awl to mark two points for the pilot holes. Use the same guide on the upright to mark the position of the pilot holes for the handle and the stretcher, see Detail A in Fig. 7.

Now, drill pilot holes in the base and uprights, counterboring ⅜" deep for a wood plug, see Fig. 6. The same gauge can be used to mark the position of the pilot holes in the ends of the stretchers and the handle. (Use a Portalign to drill the pilot holes in the ends of these pieces.

ASSEMBLY. To assemble the stand, glue and screw the stretchers between the bases. Then before mounting the uprights, I mounted the casters to the base, see Detail C. in Fig. 7. (It's a lot easier to do it before the uprights are in the way.) Finally, glue and screw the stretchers and handle between the uprights, and then glue the uprights in the mortises.

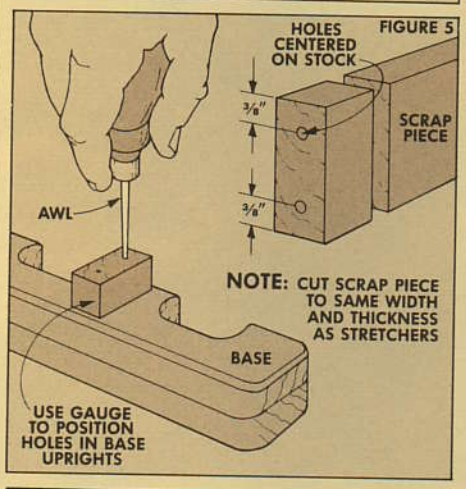

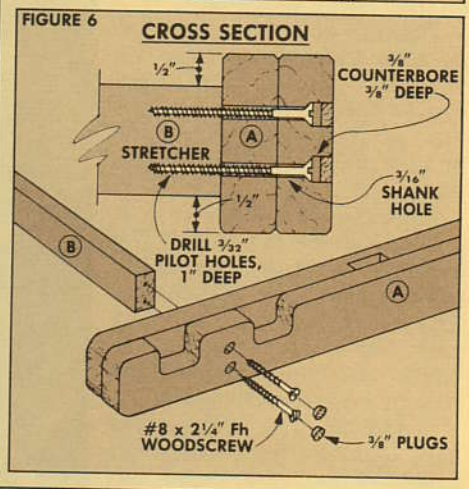

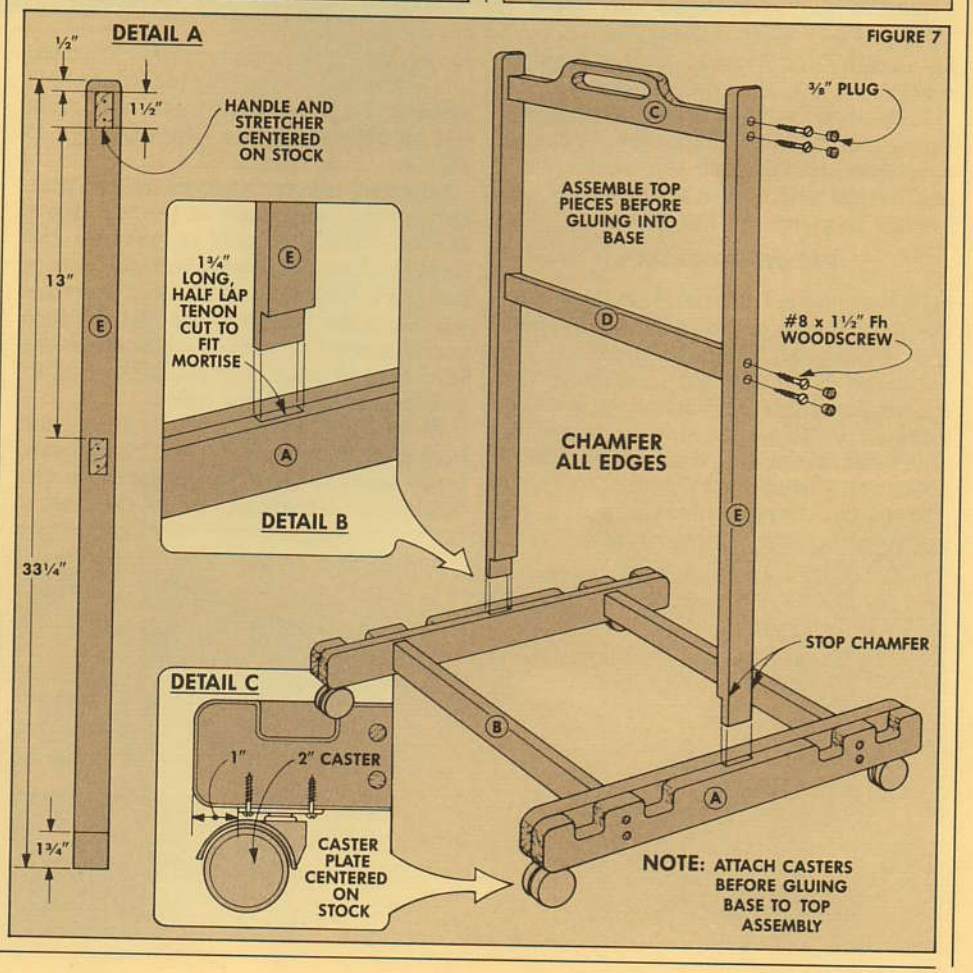

Louvered Doors

A ROUTER JIG TO DO THE JOB

I've always wanted to make a set of louvered doors. No, I'll take that back. What I really wanted was to know how to cut the angled slots that hold the louvers in place. Coming up with the jig to cut these slots presented an interesting challenge.

The slots all have to be cut at the same angle, and they have to be evenly spaced. Since these are two separate tasks, it's appropriate that the jig I came up with to do this consists of two parts.

First, there's a template that guides the router to cut the angled slots on the edge of the stile (vertical piece of the door). And second, there's an indexing rail that provides a way to "walk" the template down the stile in even 1" increments.

Shop Note: The jig described here could be modified to cut double-stopped slots for the louvers (the way most commercial operations do it), but it would also require the use of a plunge router.

Instead, we cut slots that are stopped on one end and open on the other end. The open ends (on the back side of the door) are covered with keeper strips to hold the louvers in place, see Fig. 24.

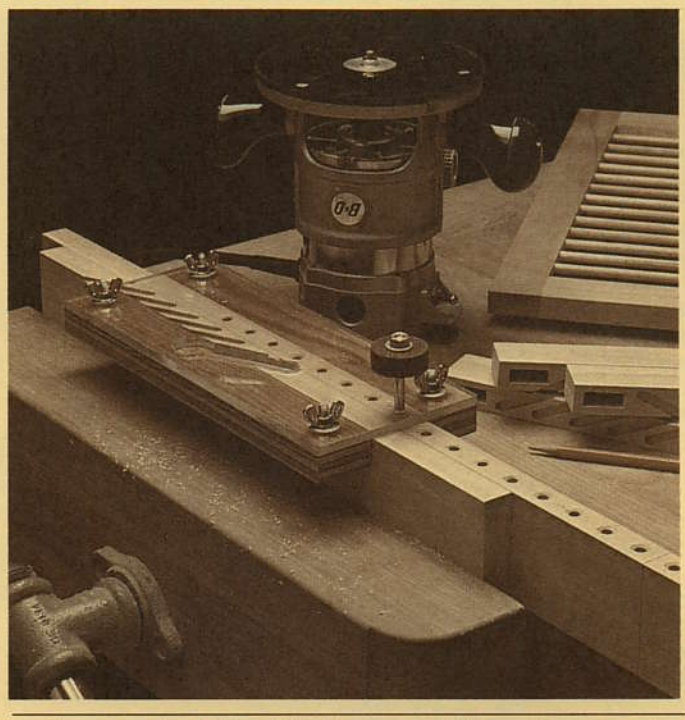

THE INDEXING RAIL

To make the jig, I started with the indexing rail. Choose a straight piece of stock 2½" wide by 24" long, see Fig 1.

Design Note: For convenience, the length shown here for the indexing rail is based on building the louvered doors for the cabinet shown on page 14. These doors are 9" wide by 17" long.

STOP PIN. After the indexing rail is cut to size, drill a ¼" hole centered 1"from the end of the rail for the stop pin. Since both sides of the rail are used, this pin sticks out on both sides, see Cross Section in Fig. 1.

INDEXING HOLES. Next, mark the positions of the index holes on the top edge of the rail. The first hole is centered 8½" from the stop pin. Then mark off 13 more positions (for a total of 14) in 1" increments along the length of the rail. At each position draw crosslines centered on the thickness of the rail to mark the centerpoints of the ¼" index holes.

Shop Note: Since work is done from both sides of the indexing rail, make sure these holes are exactly centered on the thickness of the rail. To do this, set a combination square to the approximate center and mark lines from *both* sides. Then it's easy to centerpunch a point exactly centered between these lines, see Fig 2.

DRILL HOLES. Drill the ¼" index holes 1" deep down the edge of the rail. Then switch to a countersink bit (or use a ½" twist bit, as shown in the detail in Fig. 1) to chamfer the edge of the holes so it's easier to insert the index pin.

THE TEMPLATE

The 14 holes on this indexing rail are used to move a template in 1" increments. The template, in turn, guides the router so it cuts stopped grooves at a 25° angle along the edge of the workpiece (door stile).

THE TEMPLATE. The template consists of a Masonite base with two fences that hold both the workpiece and the indexing rail in place when the slots are routed, see Fig. 3. (Note: The jig we used for the photo has a Plexiglas base so you can see the routed slots. But I'd recommend Masonite for the actual base.)

THE FENCES. To make the template, first cut two fences, 1½" wide by 11" long out of ¾" plywood, see Fig. 3.

THE BASE. Then cut the base out of a piece of ¼" Masonite so it's 11" long (to match the length of the fences). The width of the base is determined by adding up the combined width of the two fences, plus the thickness of the index rail and the workpiece (door stile), see Template Base Detail in Fig. 3.

DRILL HOLES. After the base is cut to size, mount the fences by drilling ¼"

FIGURE 1

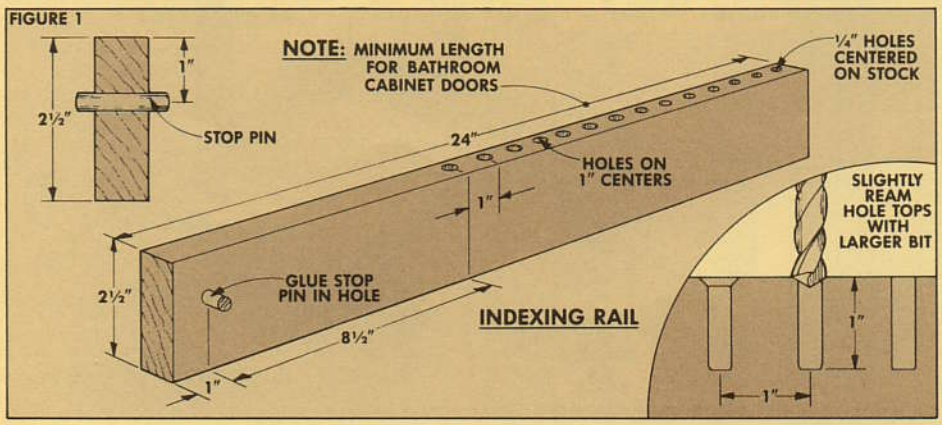

FIGURE 2

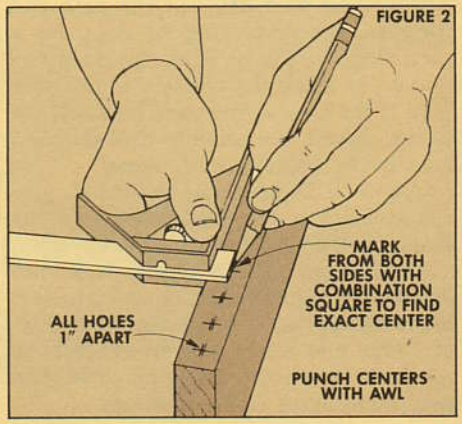

holes centered on the width and ¾" from the end of each fence, see Hole Detail in Fig. 3. Then drill ⅜" holes in the base centered directly below the ¼" holes. (The oversized holes in the base allow for minor adjustments when the workpiece is mounted in the jig.)

LAY OUT GUIDE SLOT. Next, a keyhole-shaped slot is cut in the base of the template to guide the router at 25°, refer to Fig. 11. To lay out this slot, the position of the indexing rail has to be marked on the Masonite base.

To do this, first bolt one of the fences to the base, lining up the outside edge of this fence so it's flush with the edge of the base, see Fig. 4. (From here on this is referred to as the "fixed" fence.)

MARK LINES. Draw a line along the edge of the fixed fence, see Fig. 4. Then hold the indexing rail tight against the fixed fence and draw another line, see Fig. 5.

SET T-BEVEL. Now the centerline of the keyhole slot can be marked. Remove the fixed fence and use a sliding T-bevel set to an angle of 25° to mark the centerline of the slot, see Fig. 7.

Shop Note: The way I set the T-bevel at 25° was to draw two lines 5⅞" apart on a piece of scrap Masonite, see Fig. 6. Then I marked Point A on the first line so it's 2¾" up from the bottom edge, and marked Point B where the second line intersects the bottom edge. Draw a line connecting the two points and adjust the sliding T-bevel to this line to produce a 25° angle.

CENTERLINE. With the T-bevel set at 25°, lay it on the Masonite base and mark a centerline that starts 2¾" from one end of the base, see Fig. 8.

MARK HOLES. Next, mark the position of the start and stop holes. The centerpoint of the stop hole is 3/16" from the line marking the edge of the indexing rail, see Fig. 8. Shop Note: This is a 7/16"-dia. hole to match the outer diameter of the guide bushing for the router, see Fig. 10.

START HOLE. After the stop hole is marked, mark the 1"-dia. start hole 2¾" from the center of the stop hole.

INDEX HOLE. Also, mark the position of the ¼"-dia. hole for the index pin. This hole is centered between the two marked lines, and ½" from the front end of the base, see Fig. 8.

DRILL HOLES. Now drill the holes to form the keyhole shape. Start with the 1"-dia. hole. Then drill the 7/16"-dia. stop hole, and continue with a series of 7/16" holes along the centerline, see Fig. 9.

Use a sharp chisel to smooth the edges of this slot. As it's trimmed to size, sneak up on the width of the slot, checking your progress so the guide bushing fits snugly between the edges of the slot, see Fig. 10.

When the slot is complete, attach both fences to the base with carriage bolts and wing nuts, see Fig. 11.

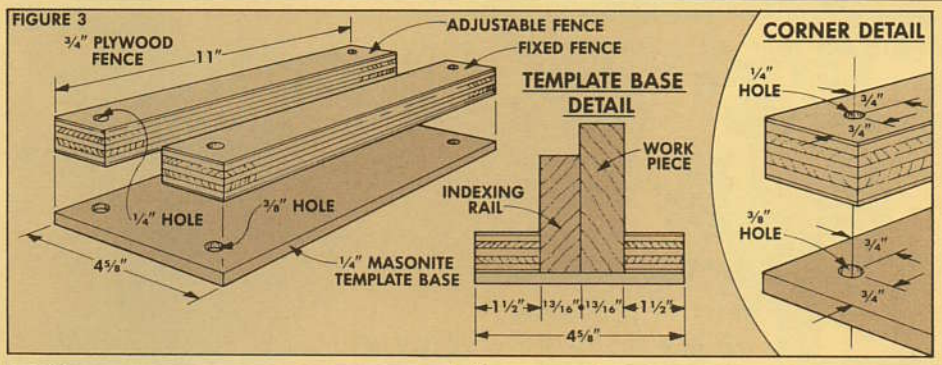

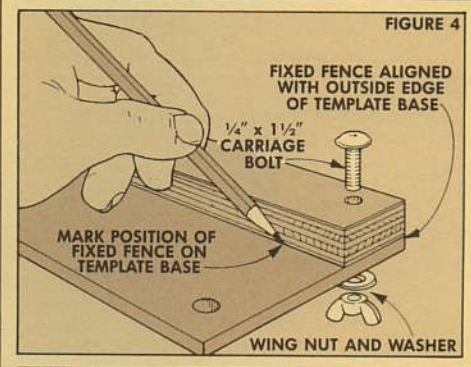

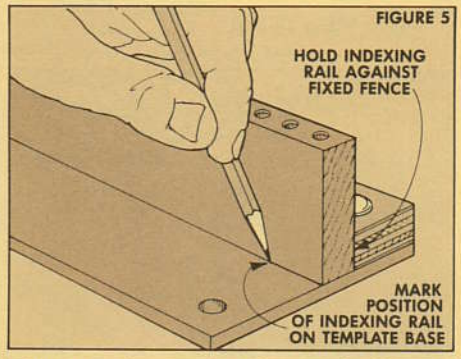

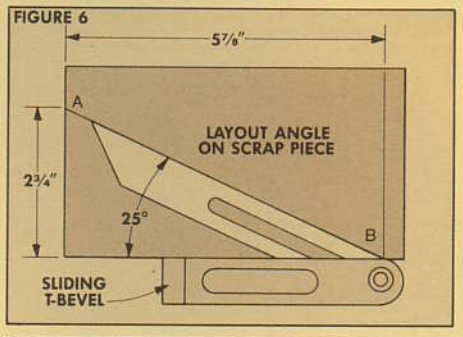

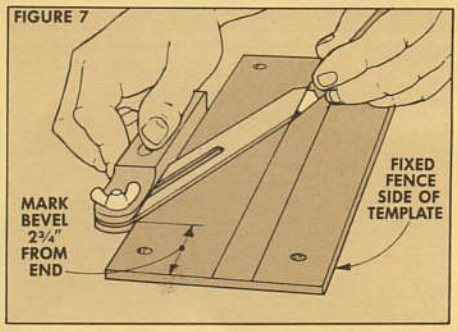

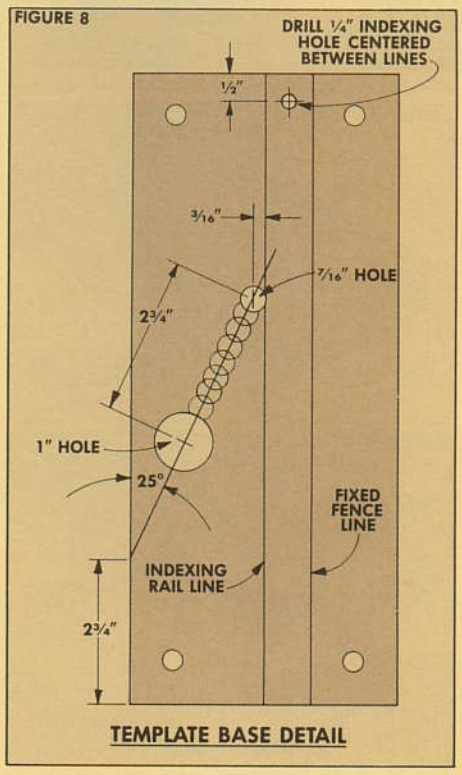

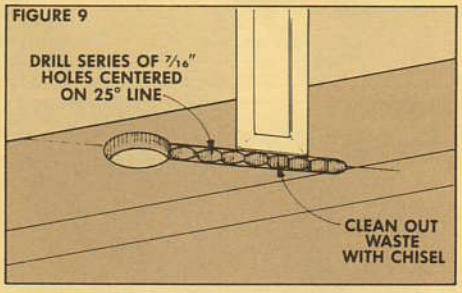

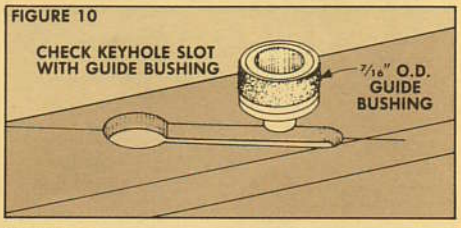

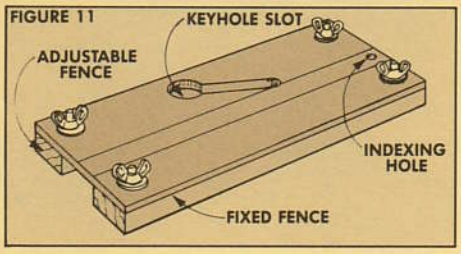

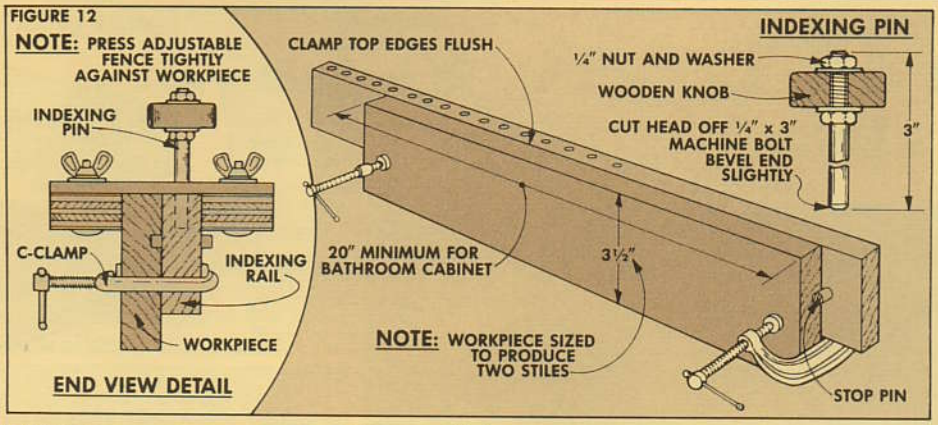

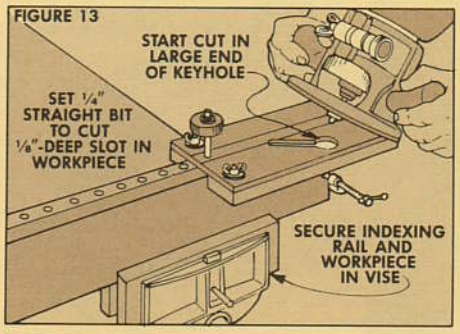

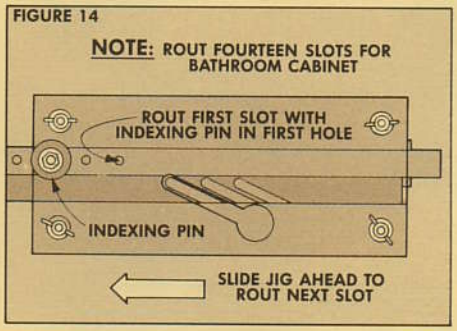

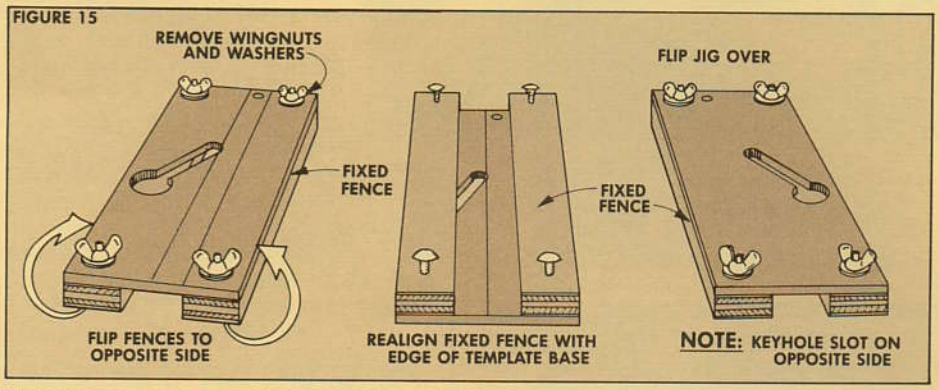

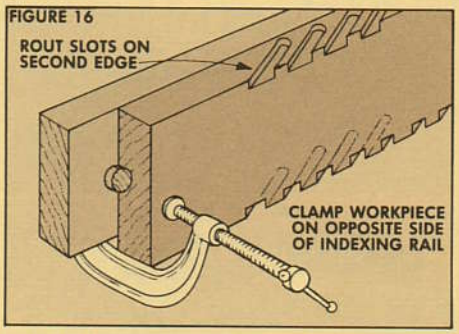

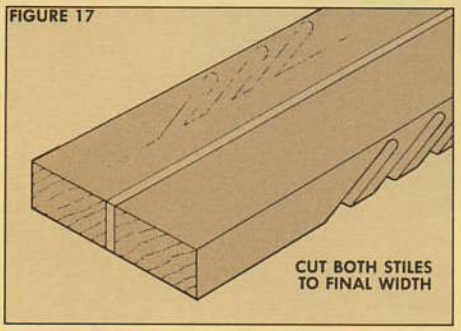

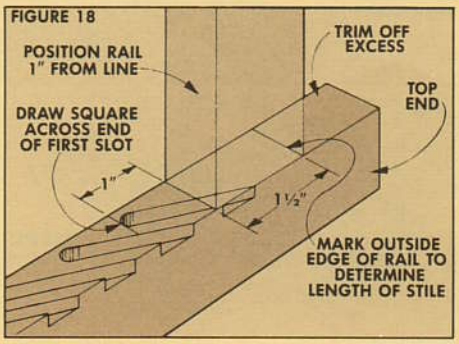

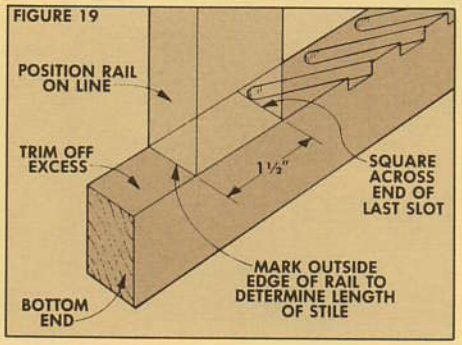

CUTTING THE SLOTS

Once the indexing rail and the template are complete, all that's needed is an index pin to position the template along the indexing rail.

INDEX PIN. The index pin is a 3" hex head bolt with the head cut off. To make it a little easier to work with, I cut a wooden disc and attached it to the threaded end of the bolt, see Detail in Fig. 12.

CUT STILES. The jig is ready to use at this point — now it's just a matter of cutting the stiles to size, mounting them in the jig, and routing the slots. However, I found it's a lot easier to work with stiles that are cut to double width.

That is, cut a workpiece wide enough for two stiles, plus an extra ½" to trim them to final width, see Fig. 12. Also, this piece should be cut about 3" longer than needed and trimmed to final length after the slots are cut. (A workpiece 3½" wide by 20" long is needed for the stiles on the bathroom cabinet door.)

MOUNT WORKPIECE TO RAIL. Clamp this workpiece to the indexing rail so the top edges are flush, and the back end is firmly against the stop pin, see Fig. 12.

MOUNT TEMPLATE. Before mounting the routing template, make sure the fixed fence is flush with the outside edge of the Masonite base and tightened down firmly. Then place the template on the top edge of the clamped assembly (see End View in Fig. 12), and push the adjustable fence snug against the workpiece and tighten down the wing nuts.

ROUT SLOTS. Place this whole assembly in a vise and insert the index pin in the first hole of the indexing rail, see Fig. 13. Then to rout the slots, mount a ¼" straight bit and a 7/16" (outer diameter) guide bushing in the router, and set the depth of cut to rout a ⅛"-deep slot.

Now tip the router on the template so the guide bushing goes into the keyhole slot and rout to the end of the slot. (In case the slot is fractionally wider than the bushing, rout against one side of the slot and then against the other side.)

From here on things get boring. Just keep moving the index pin to the next hole and rout the next slot (see Fig. 14) until 14 slots are routed.

FLIP FENCES. After the slots are routed on one edge of the workpiece, the fences on the template have to be flipped to the other side of the base to rout the slots on the other edge.

What you want to do here is switch the fences from the bottom of the jig to the top, keeping them on the same edges of the base as before, see Step 1 in Fig. 15. Then remount the carriage bolts, see Step 2. Now flip the jig over (see Step 3) and it's in position to rout the slots on the other edge of the stile.

Index of Contents No. 1-36

This index covers all of the articles (including projects and techniques) contained in the first 36 issues of *Woodsmith*. The numbers following each listing refer to the issue and pages where you can find information on the listed subject. For example, 20:4-7 refers to information in *Woodsmith* issue No. 20 on pages 4 through 7.

Adhesive
  Hide (Scotch) 19:23
  Hot melt 34:24
  Waterproof 3:7, 11; 16:10; 27:8
Angle
  Cutting odd 20:23
  Drilling 4:10; 35:22
Angled box joint 35:15
Antique wall mirror 26:18-19,24
Bachelor's chest 34:4-9
Band saw
  Blade 10:3
  Cutting duplicates 23:3
Barrister's bookcase 29:16-21,24
Bead cutting jig 16:3
Bedroom furniture 34:4-21
Bed-side stand 18:4-7; 34:16
Belt buckle 10:6
Belt sander 15:7; 10:10; 35:22
Bench
  Garden 3:8-9; 27:12-13
  Trestle 23:24
Bevel/rip 16:8; 18:3; 25:8-9
Binder, wooden looseleaf 7:4
Bits, mortising 26:20-21,24
Blanket chest 16:12-15; 32:16-21,24; 36:23
Blind dovetail 12:7
Bookcase 7:6-7; 29:16-21,24
Bookrack 7:12
Boring jig, horizontal 12:13
Bow saw 5:5
Bowl, turned
  Laminated 21:18-21
  Stave construction 25:24
Box
  Bread 4:6-8
  Display 9:11
  End grain top 15:13
  In/out 31:10-11
  Jewelry 9:5; 24:20-22
  Music 6:6-7; 28:4-7,24
  Recipe 10:8
  Routed 13:12-13; 28:10-11
  Shop storage 15:14-15
  Slide-top (finger-jointed) 17:14-15
  Tissue 2:5; 19:24
  Toy 29:4-9,24
Box joint 2:4-5; 17:12-13; 35:12-20
  Drawers 17:19
  Jig 2:4
  Rabbeted 17:19
Branding irons 10:3
Bread board 20:24
Bread box, roll-top 4:6-8
Buckle, belt 10:6
Buffet table, gate-leg 20:14-17
Bullet catch 19:12,17
Butler's tray table 14:10-11,16; 16:3
Cabinet
  Barrister's bookcase 29:16-21,24
  Bed-side stand 18:4-7
  Caddy, two-drawer 31:12-15
  Caned-panel cabinet and hutch 22:18-22
  Chair-side 24:14-17
  Colonial dry sink 18:12-15
  Colonial wall hutch 18:16-19
  Contemporary hutch 13:4-7
  Curio 21:12-15; 26:12-17,24
  European cabinet and hutch 22:18-22
  Frame and panel 8:8-11
  Icebox 36:4-10
  Modular storage system 22:12-15
  Modular wall unit 33:8-17
  Night stand 34:16-19
  Raised-panel door 8:7
  Shop storage 25:4-7
  Spool 26:4-6
  Tambour stereo 17:6-9
  Tambour TV 25:14-19
  Tambour wall 17:10-11
Cabinet scraper 14:12-13; 15:7
Camp stool 3:7
Candle stand table 11:6-7
Caned-panel cabinet and hutch 22:18-22
Canister, turned 14:14-15; 25:8-12; 27:3; 30:23
Car, toy race 5:12
Carbide-tip
  Router bit 21:8-9; 23:23
  Table saw blades 27:16-21,24; 28:19,23
Card holder 35:18-20,24
Carpenter's triangle 1:6; 15:6
Carpet tape 35:23
Cart, microwave/serving 23:8-11
Carving 32:4-6,24
  Pattern for card holder 35:20
  Pattern for quilt rack 32:24
  Reference books 32:24
  Tools 32:24
Chair
  Contemporary 2:6-8
  Deck 3:6-7
  Oak 15:8-11
  Patio 27:8-11
  Seat 25:23
Chair-side cabinet 24:14-17
Chest
  Bachelor's 34:4-9
  Blanket 16:12-15; 32:16-21,24; 36:23
  Six-drawer (box joint drawers) 17:16-19
  Sweater 9:8-9
  Toy 29:4-9,24
Cheval mirror 30:4-8,24
Child-safe finish 26:23
Chisel 19:5; 20:8-11; 25:3
Chisel case 24:20-22
Christmas ornaments 6:10-12
Circle cutter, adjustable 33:18-19
Circles, routing 20:13; 21:10-11
Circular
  Mirror frame 12:10-11
  Table top 19:3; 30:12-15
  Wall clock 30:10-11
Clamping
  Block, dovetail 32:23
  Boards 31:3; 35:3
  Corners 34:3
  Long pieces 34:24; 36:3
  Stops 9:12
  Table top 15:7, 17:3
Clamps
  Hand screws 15:7; 28:3
  Hold-down 1:6
  Pipe 15:3,7; 28:3; 32:15; 36:3
  Wedge 5:3
Clock
  Desk 10:4; 33:18-19,24
  Mantel 24:8-11; 30:23
  Octagonal wall 12:8-9
  Regulator 36:12-15,24
  Round wall 30:10-11
  Schoolhouse 21:4-7; 30:23
Clubs, woodworking (issues 27-33,35,36: page 24)
Coffee grinder 35:16-17,24
Coffee table 19:14-17; 25:20-22
Coin sorter
  Columns 16:9
  Tray 10:6
Colonial
  Dry sink 18:12-15
  Wall hutch 18:16-19
Compass 7:3; 26:3
Compound miters 36:21
Cookbook/recipe shelf 6:4-5
Cooling rack 1:2
Corner
  Joint, plywood 22:3; 33:20-22
  Template 29:3
Cove cutting 12:16; 20:23; 36:11
Curio cabinet 21:12-15; 26:12-17,24
Cut-off jig, radial arm saw 22:3
Cutting board 1:1; 32:10-12,24; 20:24
Dado blade, adjustable 17:20; 23:23; 34:22
Danish oil finishes 30:12-15
Deck
  Chair 3:6-7
  Squares 3:10
Dentil 26:12-19,22; 29:3; 31:3; 36:3
Dents 15:3
Desk
  Adjustable 31:4-9
  Lap 9:6
  Shaker-style writing 12:4-7
Diamond sharpening stones 24:7
Dining table
  Circular with leaf 30:16-21,24
  Contemporary oak 15:4-5
  Drop-leaf 11:8-10
  Picnic 27:4-7

Dining Table, *cont.*
Trestle 1:3-5; 23:12-15
Display case 26:4-6,24; 26:12-17
Display case, wall 9:11
Door
Caned-panel 22:18-22
Glass 13:8-9; 22:18-22; 24:9; 25:19; 26:15-17; 29:19-20; 36:14, 16-19
Hinges 13:8-9; 25:19
Muntins 13:8-9
Raised-panel 2:10-11; 18:4-19; 24:14-17
Techniques 13:8-9; 29:20-21
Dovetail
Blind 12:7
Clamping block 32:23
Drawers 19:15-18
Fixtures 22:6-10; 23:3; 27:3; 32:22
Groove 11:6-7
Half-blind 22:4-9; 34:4-9
Hand-cut lap 22:4-5; 23:3
Hand-cut through 19:6-11
Key 31:4-9
Leigh dovetail jig 32:22, 24
Machine-cut lap 22:6-9
Machine-cut through 32:22
Rabbeted 21:3
Routed 22:6-9; 32:22,24
Saws 19:5
Sliding 31:4-11
Through 12:7; 19:6-11
Tongue and groove 9:7; 20:20-22,24; 31:4-9,20-22
Dowels
Chamfering 10:3
Cutting 16:3
Drilling 33:3; 34:3
Grooved 16:3
Making 19:3
Sanding 9:12
Use 24:23; 29:16-21; 30:2
Drawer
Construction 17:19; 18:20-22; 19:18; 22:6-9; 31:20-22; 32:18-21; 34:13-15
Plywood 22:14-15
Routed front 21:3
Drill bits 32:23
Drill guide, *Portalign* 12:3,13
Drill press
Adjustment wrench 32:3
Collet chuck 12:3; 26:23
Guide 1:6
Hole boring jig 22:3
Mortises 18:23
Mortising bits 26:20-21
Pressmate table elevator 16:20
Router chuck 12:3
Table support 19:3
Drilling
Angle 4:10, 35:22
Circles 33:18-19
Dowels 33:3; 34:3
Shopsmith Mark V 29:3
Drop-leaf
Hinge 11:10; 14:8
Joint 11:10; 14:7-8
Pembroke table 14:4-8
Table 11:8-10
Drum sander 35:22
Edge gluing 32:13-15; 35:23
Ellipse 5:8; 14:3; 16:3; 19:3; 24:3
End boards 9:7; 20:24 23:13;
End grain
Box 15:13
Gluing 24:23
Sealing 9:3
English wall lantern 36:16-19,24
Feather boards 33:23
File cabinet 7:8-9; 29:10-15
File caddy, two drawer 31:12-15
Filler
Nail hole 15:3
Sawdust glue 17:3
Finger joint 17:14-15; 35:18-20
Finishes
Non-toxic 19:23; 25:23; 28:24; 32:12,24; 36:23
Oil 30:12-15,24; 31:23,24; 32:7-9,24; 36:23
Outdoor 27:14-15
Turning 25:23
Finishing techniques 14:9; 28:3; 32:7-9
Forest Products Laboratory 36:24
Frame
Circular 12:10-11; 30:10-11
Gluing 26:11; 30:9
Mitered 33:18-19
Molded edge 24:8-17,20-22; 29:20-21; 30:4-8
Mortise and tenon 26:7-11
Octagonal 12:8-9; 21:4-7
Oval 5:9
Rabbet routing 26:22
Web construction 8:8-11; 14:10-11; 22:18-22; 24:14-17; 25:14-17; 26:12-17; 29:4-21; 31:4-9; 34:4-9,16-19
Frame and panel construction 8:6, 8-11; 16:12-15; 18:4-19; 24:14-17,20-22; 29:4-22; 34:10-12; 36:4-10
Gallery clock 30:10-11
Gate-leg buffet table 20:14-17
Glass
Cutting 13:16; 17:20
Door 13:8-9; 22:18-22; 24:9; 25:19; 26:15-17; 29:19-20
Mounting 11:3
Sanding 13:3
Glue, hot-melt 34:24
Gluing 7:3; 9:3; 10:3,9; 15:7; 17:4-5; 18:3; 19:23; 20:23; 21:9; 23:22; 24:23; 26:11; 27:23; 28:9,24; 31:3; 32:10, 13-15,23
Edge 32:13-15
End grain 24:23
Frame 26:11; 30:9
Inlay 28:9
Miters 21:9; 30:9
Stains 33:23
Tambours 17:4-5
Goblets, turned 23:4-7; 24:23
Grinder tool rest 20:7; 24:3
Grinding wheels 20:4-6,12; 23:23
Half-blind dovetail 22:4-9; 34:4-9
Half-lap 1:4,7,8; 2:11; 15:8-11; 16:6-7; 22:18-22; 27:4-13,22; 29:23
Hall mirror 21:16
Hand-cut dovetails 22:4-5; 23:3
Hand screws 15:7; 28:3
Headboard 34:10-12
Hexagon 12:10-11,14; 16:8-9; 18:3
Hinges
Butler's tray table 14:16; 16:3; 20:23
Drop-leaf 11:10; 14:8
Glass door 25:19
Knife 13:8-9
Mortises 32:22
Wooden (issue #9)
Horizontal boring jig 12:13
Hot-melt glue sheets 34:24
Hutch
Contemporary 13:4-7
Caned-panel cabinet 22:18-22
Icebox 36:4-10
Icebox hardware 36:24
Inlay 20:17; 26:6,22; 28:8-15,24
In/out box 31:10-11
Jack plane 15:7; 23:16-17,20-21
Japanese water stones 24:4-6; 26:23; 31:23
Jewelry box 9:5; 24:20-22
Jig
Angle drilling 4:10; 35:22
Bead cutting 16:3
Box joint 2:4; 17:12-13; 35:12-20
Cove cutting 12:16; 36:11
Cutting plastic laminate 33:3
Cut-off 15:15-16; 28:3
Dentil molding 26:22; 29:3
Depth gauge 31:3
Dowel making 19:3
Drilling 22:3; 25:3; 33:3
Feather boards 33:23
Finger joint 17:14-15; 35:18-20
Horizontal boring 12:13
Miter 12:15; 24:12-13; 36:22
Mortise cutting 16:18; 18:23; 26:9
Octagonal frame cutting 21:17
Open-spline miter 36:22
Panel cutting 8:12; 18:23; 22:11; 25:13
Pin-routing 28:20-22
Plastic laminate 33:3
Radial-arm router 20:3
Radial-arm saw cut-off 22:3
Raised panel 18:10-11; 20:3
Resawing 6:9; 35:21
Ripping 25:13
Router-cut mortise 26:3
Routing round blanks 25:3
Tambour gluing 17:4-5; 25:18
Taper 1:6; 5:4; 11:3
Tenon 16:18; 24:18-19; 28:3
Joinery
Box 2:4-5; 17:12-13,19; 35:12-20
Box, rabbeted 17:19
Corner, plywood 22:3; 33:20-22
Dovetail 19:6-11; 22:4-9; 23:3; 32:23
Dovetail key 31:4-11
Dovetail tongue and groove 9:7; 20:22; 31:20-22
Drop-leaf 11:10; 14:7-8
Finger 17:14-15; 35:18-20
Frame and panel 8:6,8-11; 18:10-11; 24:14-17; 29:22
Half-blind dovetail 22:4-9; 34:4-9
Half-lap 27:22; 29:23
Half-lap, mitered 2:11
Hand-cut dovetail 19:4-11; 22:4-5
Haunched mortise and tenon 18:8-9

Joinery, *cont.*
Locked miter 9:10
Machine-cut dovetail 22:6-9
Miter and spline 7:11; 21:8-9; 30:9,22; 36:22
Mitered half-lap 2:11
Mitered mortise and tenon 16:16-17
Molded mortise and tenon 24:12-13,24
Mortise and tenon 8:3-5; 13:10-11; 15:12; 16:16-17; 18:8-11,24; 22:18-22; 24:12-13,18-19; 25:22; 26:7-11
Open mortise and tenon 24:18-22
Open-spline miter 36:22
Parallel spline 9:9
Rabbet and groove (also called rabbet/dado) 6:8; 10:9; 18:20-21
Routed dovetail 22:6-9
Rule 11:10; 14:7-8
Sliding dovetail tongue and groove 20:20-21; 31:4-11
Stave construction 25:8-9; 27:3; 30:23
Stopped dado 36:12
Stub tenon and groove 29:22; 31:4-9
Through dovetail 19:6-11
Tongue and groove 29:22; 33:20-22
Twin tenon 12:12
Wedged mortise and tenon 15:8-12
Knife holder 10:7
Lamp
Dovetail 22:24
Hanging 2:9
Lantern, English wall 36:16-19,24
Lazy Susan 21:10-11
Legs
Tapered 11:11; 14:5
Turned 12:5
Leigh dovetail router jig 32:22,24
Letter opener 10:7
Light bracket, swivel 9:4
Linseed oil finish 30:12-15
Machine-cut dovetail 22:6-9; 32:22
Mantel clock 24:8-11; 30:23
Marking gauge 19:12-13; 21:3
Marquetry, inlay 20:17; 26:6,22; 28:8-15,24
Memo board 18:24
Microwave/serving cart 23:8-11
Mirror
Antique wall 26:18-19,24
Cheval 30:4-8,24
Circular frame 12:10-11
Hall 21:16
Vanity 10:5; 24:24
Wall 34:20-21
Miter
Compound 36:21
Cutting 12:14; 21:8-9; 25:23; 30:9
Gauge, table saw 29:23
Gluing 21:9; 30:9
Jig 12:15; 24:12-13
Locked 9:10
Mathematics 12:14-15
Miter and spline joinery 7:11; 21:8-9; 30:9; 36:22
Mitered half-lap 2:11
Mitered mortise and tenon 16:16-17
Modular storage system 22:12-15
Modular wall unit 33:8-17,24
Molded mortise and tenon 24:12-13
Moldings 26:22; 36:11
Mortise
Cutting jig 16:18; 18:23; 26:9
Drill press 18:23
Router-cut, jig 26:3
Slot 8:4; 10:3; 13:10-11; 26:8-9
Mitered 16:16-18
Through 15:12
Twin 12:12
Mortise bits 26:20-21
Mortise and tenon
Frame and panel 18:10-11; 26:7-11
Haunched 8:3-5; 13:10-11; 18:8-9
Molded edge 24:12-13
Mitered 16:16-18
Open 24:18-19
Twin tenon 12:12
Wedged 15:12
Muntins 13:8-9
Music box 6:6-7; 28:4-7,24
Nailing fixture 15:3
Nestled tables 28:12-15
Night stand 34:16-19
Note board 18:24
Octagon 12:8-9; 16:10; 21:4-7
Frame jig 21:17
Oil finishes 30:12-15; 32:7-9; 36:23
Open-spline miter 36:22
Ornaments, Christmas 6:10-12
Outdoor
Furniture 3:3-12; 27:4-13
Finishes 27:14-15
Palm sanders 14:12; 33:7
Panel cutting 8:12; 18:23; 22:11; 25:13
Parallel spline 9:9
Patio chair 27:8-11
Pembroke table 14:4-8
Pencil and card holder 2:12
Picnic table 27:4-7
Picture frame router bit 9:3; 10:3
Picture and glass mounting 11:3
Pin routing 28:10-11,16-18,20-22
Pipe clamps 15:3,7; 28:3; 36:3
Plane
Adjustments 23:16-22; 25:23
Bench 15:7; 23:16-22
Flattening 23:22; 25:3; 29:23
Jack 15:7; 23:16-17
Sharpening 23:18-19
Planer, *Wagner* Safe-T- 10:10; 15:7
Planing, table top 23:21
Planter
Cedar pillars 3:4
Hanging 3:12
Redwood tub 3:3
Tapered-sides 16:10-11
Plunge routers 28:23
Plywood
Buying tips 30:23
Corner joint 9:10; 22:3
Cutting 34:24
Drawer construction 22:14-15
Splintering 22:11
Popcorn bowl, turned 25:24
Portalign
Drill guide 12:3,13
Shaper bit 12:10-11
Pressmate drill press table elevator 16:20
Quarter-round stops 36:20
Quilt rack 32:4-6
Rabbet and groove joint (also called rabbet/dado) 6:8; 10:9; 18:20-21
Rabbeted
Dovetails 21:3
Drawer front 18:20-21; 22:6-9
Frame, routed 26:22; 30:9
Radial arm saw
Cut-off jig 22:3
Router jig 20:3
Stand 32:3
Table insert 20:3
Techniques 15:16; 16:16-18; 18:11,23; 31:3
Raised-panel 2:10; 8:7; 18:10-11,23; 20:3; 23:23
Rasp 26:23
Recipe box 10:8
Regulator clock 36:12-15
Resawing 6:9; 28:4-7; 35:21
Rip/bevel 16:8
Ripping jig 25:13
Roll-top bread box 4:6-8
Rosan inserts 22:11; 24:3; 27:24; 28:24; 30:3
Routed
Box sides 13:12-13; 28:10-11
Dovetails 22:6-9; 32:22
Snack tray 28:16-18
Router
Auxiliary base 35:3
Bit, gluing dovetail 31:24
Bit, mortising 26:20-21
Bit, picture frame 9:3; 10:3; 36:24
Bit, raised panel 23:23
Buyer's guide 31:16-19
Case 4:3
Chuck with drill press 12:3
Debris 24:23; 34:3
Direction 36:20-21
Dovetail fixtures 22:6-9; 23:3; 32:22,24
Guide, multi-purpose 17:20
Jig, centered grooves 30:22
Jig, dentil molding 29:3
Jig, lap dovetail 22:6-9
Jig, mortise cutting 26:3
Jig, radial arm saw 20:3
Jig, round blanks 25:3
Pin 28:20-22
Plunge 28:23
Techniques 20:13; 21:8-11; 25:13; 26:22; 28:10-11,16-18,20-22; 30:4-11; 36:21
Trammel attachment 21:10; 30:9
Router table
Construction 20:18-19; 22:16-17; 31:3
Inserts 30:3
Pin-routing attachment 28:20-22
Sabre saw setup 30:3
Stand 22:16-17
Table saw extension 24:3
Vacuum attachment 36:3
Rubber cement 35:22
Rule joint 11:10; 14:7-8
Rule, *Starrett* 34:23
Safety 15:3; 31:23; 34:3,23; 36:23
Safe-T-Planer, *Wagner* 10:10; 15:7
Sander
Belt 15:7; 33:3; 35:22

Sander, *cont.*
Drum 35:22
Palm 33:7; 34:3,22
Rockwell Sped Bloc 14:12; 33:7
Sander stand, belt 10:10
Sanding
Circles 11:12
Disk 13:3; 15:3; 31:3
Dowels 9:12
Drum 13:3; 15:3; 25:3; 32:3
Glass 13:3
Table top 15:7
Sandpaper 33:4-6; 34:3
Saw, dovetail 19:5
Saw blade
Band 10:3
Dado blade 34:22
Table, carbide-tipped 27:16-21,24; 28:19,23
Cleaning 17:3; 21:23
Schoolhouse clock 21:4-7; 30:23
Sconce, candle 6:5
Scrap wood projects 3:12; 10:4-8; 14:14-15
Scraper, cabinet 14:12-13; 15:7
Screws
Brass 18:3
Sheet rock 18:3; 19:23
Serving
Cart 23:8-11
Tray 19:19
Shaker-style
Peg rack 2:3
Step stand 19:20-22
Table 11:4-9
Writing desk 12:4-7
Shaper
Bit 12:3,10-11
Guides 19:23
Sharpening
Aids 20:7; 31:3; 33:3
Carbide-tipped table saw blades 28:19
Chisels 20:8-11; 26:23
Diamond stones 24:7
Japanese water stones 24:4-6; 26:23; 31:23
Plane irons 23:18-19
Scraper blade 14:13
Stones 20:4-7,12-13; 21:23
Table saw blades 28:19
Shelf
Aligning brackets 11:3
Wall 20:20-21
Shooting board 13:3
Shop storage
Box 15:14-15
Cabinet 25:4-7
Cart 13:14-15
Side table 11:4-5
Sliding dovetail tongue and groove 20:20-21; 31:4-11
Snack tray, routed 28:16-18
Spalted wood 28:23
Spice box 6:3
Spindle turning 26:3
Spline
Cutting 10:3; 15:4-5; 21:8-9; 30:9
Parallel 9:9
Routed groove 21:8-9
Spline, *cont.*
Use 23:22; 32:14-15
Spool display case 26:4-6
Spoon display case 9:11
Spray Mount 35:22-23
Starrett rules 34:23
Stave construction 25:8-9,24; 27:3; 30:23
Stereo cabinet, tambour 17:6-9
Sticker stains 34:22
Stones
Diamond 24:7
Japanese water 24:4-6; 26:23; 31:23
Sharpening 20:4-7,12-13; 21:23
Stool
Camp 3:7
Child's 35:12-13
Shop 4:11
Stopped molding cuts 36:20-21
Stopped rabbets 36:21
Storage
Modular system 22:12-15
Modular wall unit 33:8-17
Shop 15:14-15
Table saw 13:14-15
Sweater chest 9:8-9
Table
Butler's tray 14:10-11,16
Candle stand 11:6-7
Coffee 1:7; 19:14-17; 25:20-22
Contemporary oak 15:4-5
Dining 11:8; 15:4; 20:14; 23:12; 30:16
Drop-leaf 11:8-10; 14:4-8
Gate-leg buffet 20:14-17
Kitchen 15:4-5
Leaf 30:18-19
Nestled 28:12-15
Picnic 27:4-7
Pembroke 14:4-8
Shaker-style side 11:4-5
Trestle 1:3-5; 23:12-15
TV tray 16:4-7
Table saw
Bevels 23:3
Blades, carbide-tipped 27:16-21,24; 28:19,23
Compound miters 36:21
Cove cutting jig 36:11
Cutting plastic laminate 33:3
Dado blade, adjustable 17:20
Insert 35:23
Miter gauge 25:3
Setup 20:3
Tambour
Roll-top bread box 4:6-8
Stereo cabinet 17:6-9
Techniques 4:6-8; 17:4-11; 20:3; 25:14-19
TV cabinet 25:14-19
Wall cabinet 17:10-11
Taper
Bevel 16:10-11
Cutting 32:10-12
Jig 1:6; 5:4; 11:3
Tapered legs 11:11; 14:4-8; 28:12-13
Tenon
Cutting 18:10-11; 26:10-11
Haunched 18:8-9
Jig 24:18-19
Mitered shoulder 16:16-17
Tenon, *cont.*
Repairing round 23:3
Staggered-shoulder 13:10-11
Stub 29:22; 31:4-9; 33:20
Twin 12:12
Threaded inserts 22:11; 24:3;27:24; 28:24; 30:3
Tie rack 1:2
Tissue box 2:5; 19:24
Tongue and groove joint 9:7; 29:22 31:12-15,20-22; 33:20-22
Tool rest, grinder 20:7; 24:3
Tool storage 4:9,12
Toy
Biplane 35:8-11,24
Chest 29:4-9,24
Race car 5:12
Train 5:10-11
Truck 35:4-7,24
Tray
Routed snack 28:16-18
Serving 19:19
Snack 28:16-18
Trestle
Bench 23:24
Leg assembly (desk) 31:4-9
Table 1:3-5; 23:12-15
Trivet 21:24; 22:23
Tung oil finish 30:12-15; 32:7-9,24; 36:23
Turning
Bowl 21:18-21; 25:24
Canister 14:14-15; 25:8-12; 27:3; 30:23
Fruit bowl 21:18-21
Goblets 23:4-7; 24:23
Gouges 21:22; 24:23
Legs 12:5
Popcorn bowl 25:24
Scraper 21:22; 22:23
Spindle 26:3
Tools 21:18-22; 22:23; 24:23
TV tray tables 16:4-7; 17:20
Vanity mirror 24:24
Veneer 14:10-11; 33:18-19
Veneer tape 17:8; 22:11-14;
Vise
Dogs 28:3
Holding Jig 29:3
Wagner Safe-T-Planer 10:10; 15:7
Wall lantern, English 36:16-19,24
Wall mirror 21:16; 26:18-19,24; 34:20-21
Wall shelf 20:20-21
Wall unit 33:8-17,24
Waste basket 7:5
Water stones, Japanese 24:4-6; 26:23; 31:23
Web frame construction 8:8-11; 22:18; 29:4-21; 31:4-9
Wedge clamps 5:3
Wood
Dimensions 22:23
Information 36:24
Movement 9:7; 31:23
Outdoor use 3:11; 27:14-15
Sample kits 34:23
Spalted 28:23
Storage 19:23; 30:3
Wooden hinges 9:5-11
Woodworking clubs (issues 27-33,35,36: page 24)

REMOUNT WORKPIECE. Since the jig is flipped around, the workpiece has to be flipped and mounted to the other side of the indexing rail. Switch it around so the first set of slots are now on the bottom edge but still "pointing" to the indexing rail, see Fig. 16.

ROUT SLOTS. After switching the workpiece, mount the template and rout the slots on the other edge of the workpiece. When you're done, it should look like what's shown in Fig. 16.

CUT TO FINAL SIZE. After the slots are routed on both edges, rip two 1½"-wide stiles from the workpiece, see Fig. 17.

CUT TO LENGTH. Now mark the position of the rails on both ends of the stile. At the top end, square a line across the stile at the stopped end of the first slot, see Fig. 18. Measure up 1" and square another line. From this second line, mark off the width of the rail (1½"), and cut off the top end of the stile here.

This procedure positions the top rail so only 1" of the top louver is showing, see Fig. 22. This is done to make the top louver look like all the others. (They all overlap so you only see 1" of their width.)

BOTTOM END. To cut off the bottom end of the stile, square across the end of the last slot and mark off the width of the rail (1½") from this line, see Fig. 19.

THE DOOR FRAME. To complete the door, cut mortises in the stiles. (See *Woodsmith* No. 26 for a step-by-step article on cutting mortise and tenon joints.) Then cut the rails to size and cut tenons to fit the mortises, see Fig. 20.

After the joints are cut, dry-assemble the frame to make sure everything fits, but don't glue it together — the louvers have to be cut first.

THE LOUVERS

The louvers are ¼"-thick slats that are resawn (ripped on edge) from 4/4 stock, see Fig. 21. The tricky part is cutting them to the right width. You want the back edge of the louver to be flush with the back face of the door, see Fig. 22.

Cut a test piece and round the edges with a ⅛" round-over bit, see Detail in Fig. 21. Then test the fit in the slots. When you get a piece that's the right width, resaw all the louvers, round the edges, and cut them to length to fit between the slots.

ASSEMBLE FRAME. Now the door frame can be assembled. However, the top louver has to be in place. Cut this louver to fit under the rail, see Fig. 22. Then clamp the frame together and let it dry.

KEEPER STRIPS. Now mount the rest of the louvers, see Fig. 23. To hold them in place, mount keeper strips to the back side of the door frame, see Fig. 24. These strips are mitered to length and screwed to the frame with ½" brass screws.

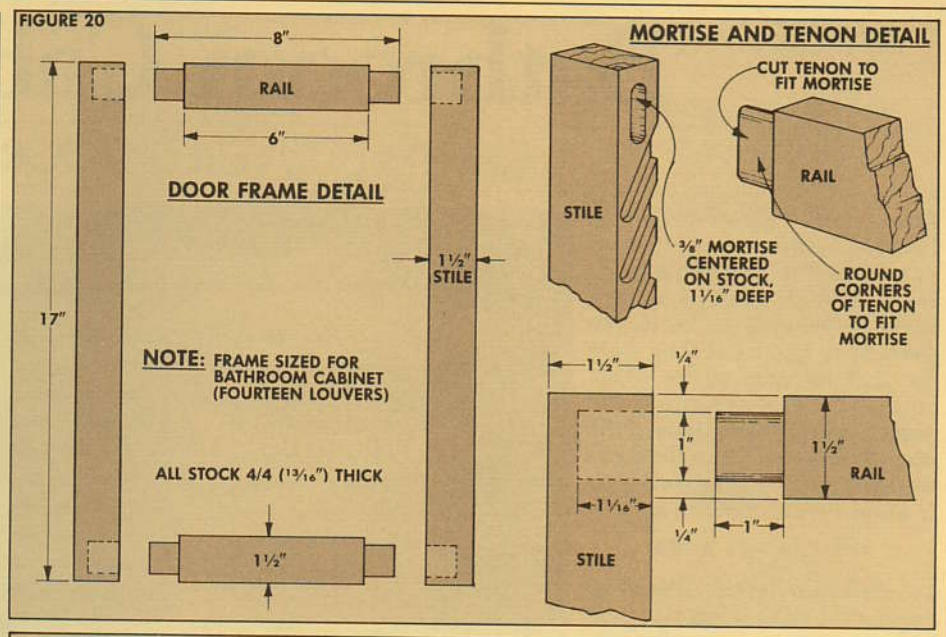

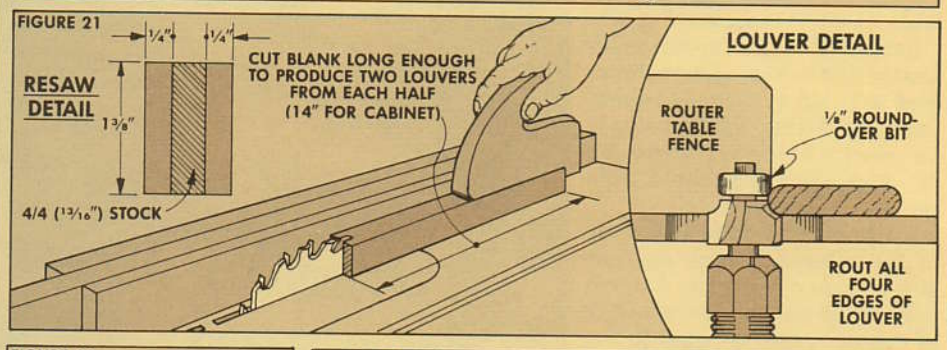

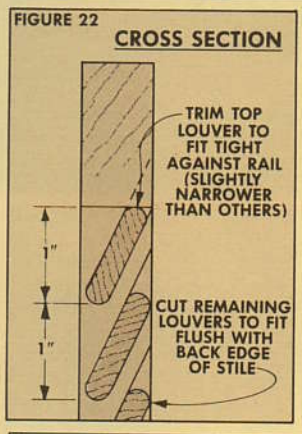

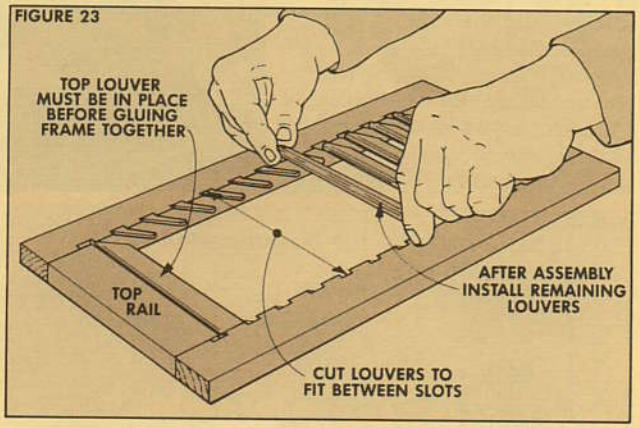

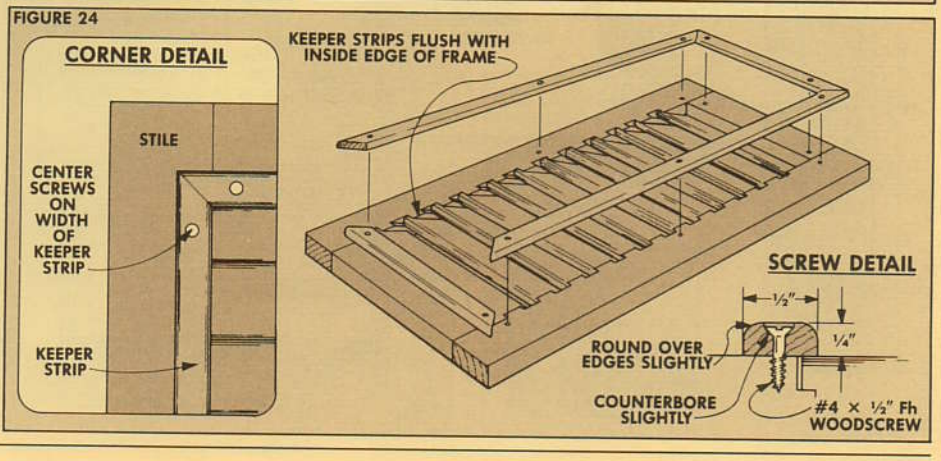

Bathroom Cabinet

WITH LOUVERED DOORS

After I built the louvered doors, I needed a way to show them off so I decided to build this bathroom cabinet. It may seem a little backwards to build the doors first, but I felt they were the trickiest part of the whole cabinet — and presented the best chance for variations in the final dimensions. Once the doors were built, it was relatively easy to build the cabinet to fit.

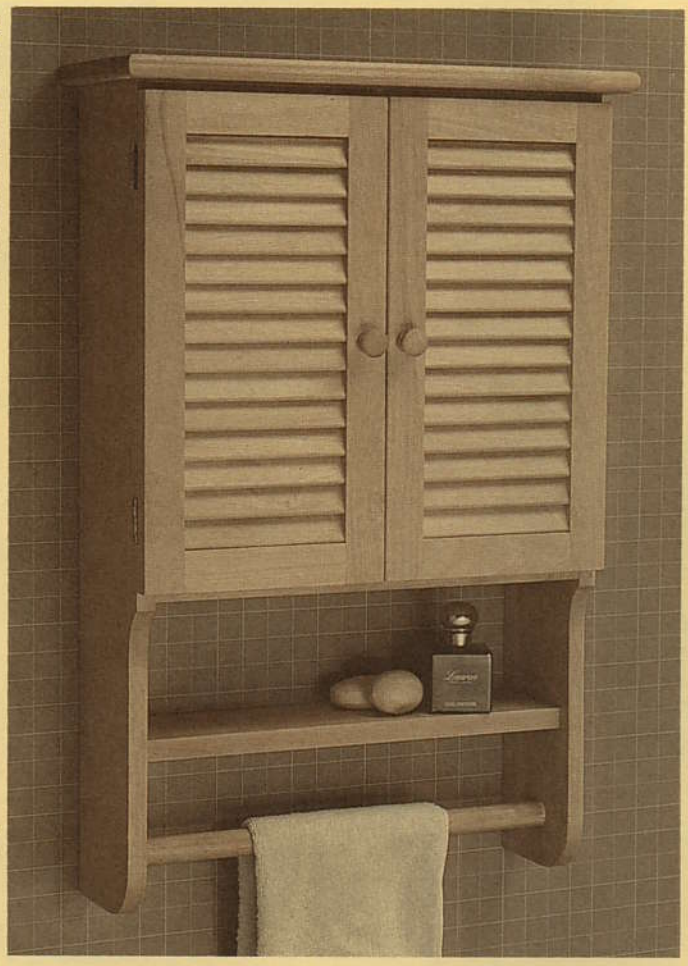

THE CABINET SIDES

I started work on the cabinet by cutting the sides (D) to size — 6" wide by 29¼" long, see Fig. 1.

DADOES. The sides are joined to the top and bottom of the cabinet and a shelf with dado/rabbet joints. To do this, the first step is to rout three ¼"-wide by ⅜"-deep dadoes in both side pieces.

TOP DADO. The dado at the top of the cabinet is positioned so the distance from the bottom edge of the dado to the top edge of the side piece is equal to the thickness of the cabinet top (E), see Joint Detail in Fig. 1.

MIDDLE DADO. The position of the next dado (for the bottom of the cabinet) is determined by the height of the doors. The doors I built were 17" high, and I wanted them to overlap the top and bottom of the cabinet ⅜", see Front View in Fig. 1. To produce this ⅜" overlap, the middle dado must be positioned so there's a 16¼" opening between the top and bottom of the cabinet.

BOTTOM DADO. A third dado is cut for the narrow shelf (F) below the cabinet. This dado is stopped 4" from the back edge of the side piece, see Fig. 2.

GROOVE FOR BACK. After the dadoes are cut, a groove is needed for the plywood back. This groove starts at the top edge of the side pieces and stops at the middle dado, see Side View in Fig. 1.

However, since this groove is also needed in the top and bottom pieces (E) (see Fig. 2), hold off on cutting it until it can be cut on all four pieces at once.

HOLE FOR BAR. Finally, I drilled a 1"-dia. hole ⅜" deep in each side piece for a towel bar, see Fig. 1.

THE CABINET

The sides of the cabinet are joined to the top and bottom pieces (E) and the lower shelf (F). To cut these three pieces to size, rip the top and bottom

FIGURE 1

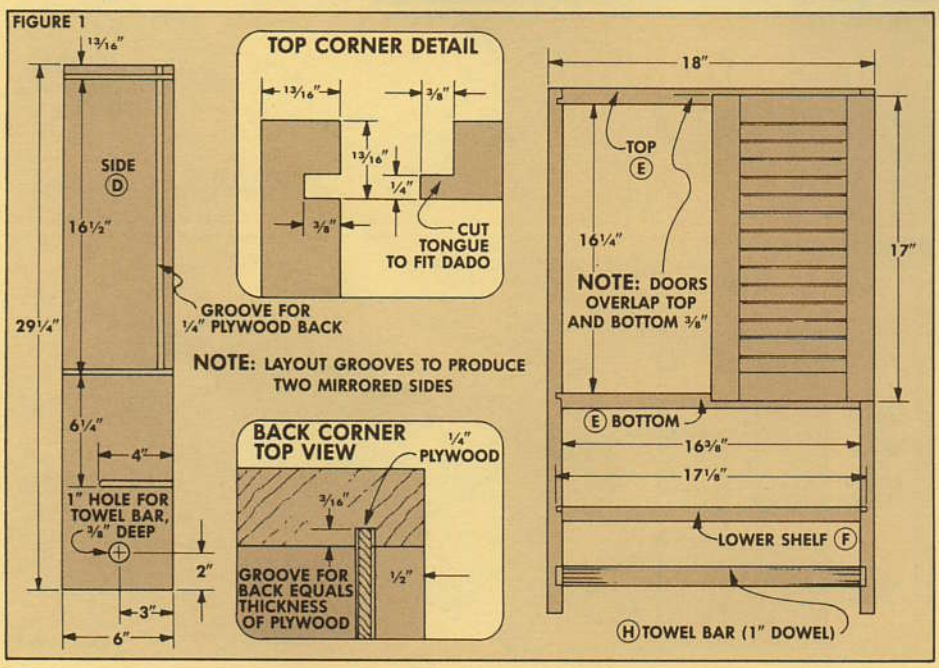

MATERIALS LIST

Overall Dimensions: 19½" w × 7⅛" d × 30" h	
A Door Stiles (4)	13/16 × 1½ - 17
B Door Rails (4)	13/16 × 1½ - 8
C Louvers (28)	¼ × 1⅜ - 6¼
D Cabinet Sides (2)	13/16 × 6 - 29¼
E Cabinet Top/Btm. (2)	13/16 × 6 - 17⅛
F Lower Shelf (1)	13/16 × 4½ - 17⅛
G Cap (1)	13/16 × 7⅛ - 19½
H Towel Bar (1)	1" dowel - 17⅛
I Back (1)	¼" plywood (cut to fit)

CUTTING DIAGRAM

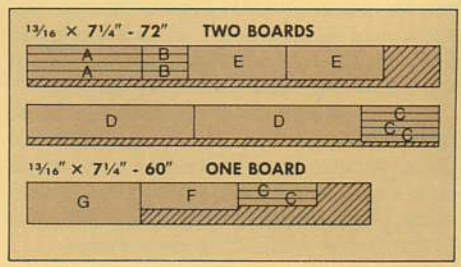

pieces 6″ wide (to match the width of the side pieces). Then rip the shelf to a width of 4½″, see Fig. 2.

These pieces have to be cut to length so when they're joined to the cabinet sides the final width of the cabinet equals the width of the two doors. (On the cabinet I built this length turned out to be 17⅛″, which allows for the two ⅜″-long tongues to fit in the dadoes, see Fig. 2.)

CUT TONGUES. After cutting these three pieces to length, I cut rabbets on each end to produce a tongue to fit the dadoes in the side pieces. (The tongue on the shelf is trimmed back to fit the stopped dado.)

GROOVES FOR BACK. Now the grooves for the plywood back can be cut. Set up the router table to rout 3/16″-deep stopped grooves in the sides (D) ½″ from the back edge, see Fig. 1. Then use the same set-up to rout the grooves for the plywood back on the top and bottom pieces (E).

CABINET BACK. After the grooves are cut, dry-assemble the cabinet and take measurements for the plywood back. Then cut it to fit in the grooves.

SHAPE THE SIDE PIECES. The last step is to cut the curved shape on the front edges of the side pieces. First, mark a point ½″ down from the cabinet bottom (E), see Side View in Fig. 2.

Then draw a gentle curve from this point to a line 1″ back from the front edge. This line extends until it intersects a 2″ radius drawn at the bottom corner. Cut this profile on the side pieces and sand the edges smooth with a drum sander.

ASSEMBLE CABINET. Now finish sand all the interior surfaces of the pieces and glue and clamp the cabinet together.

THE CAP PIECE. While the glue was drying, I cut the cap piece (G) for the cabinet. This piece is cut to length so it overhangs both sides ¾″ (see Fig. 4), and to width so it overhangs the front edge of the side pieces 1⅛″, see Side View in Fig. 2.

After this piece was cut to size, I rounded the front edge and both ends to a modified bull-nose profile using a ½″ round-over bit on the router table, see Fig. 3. Then this cap is screwed to the cabinet top, see Fig. 4.

MOUNT DOORS. To mount the doors, cut hinge mortises in the cabinet sides and the door, see Fig. 6. (I cut the mortises in the door first. Then mounted the hinges and aligned them on the sides to mark the position for the other flap.) Also mount a magnetic catch, door knobs, and shelf standards (for two glass shelves inside the cabinet), see Fig. 5.

MOUNTING SYSTEM. The last step is to make the mounting system. This consists of two bars that have one edge ripped to a 30° angle, see Cross Section in Fig. 6. Mount one bar to the cabinet and the other to the wall so the beveled edges interlock to hold the cabinet to the wall.

FIGURE 2

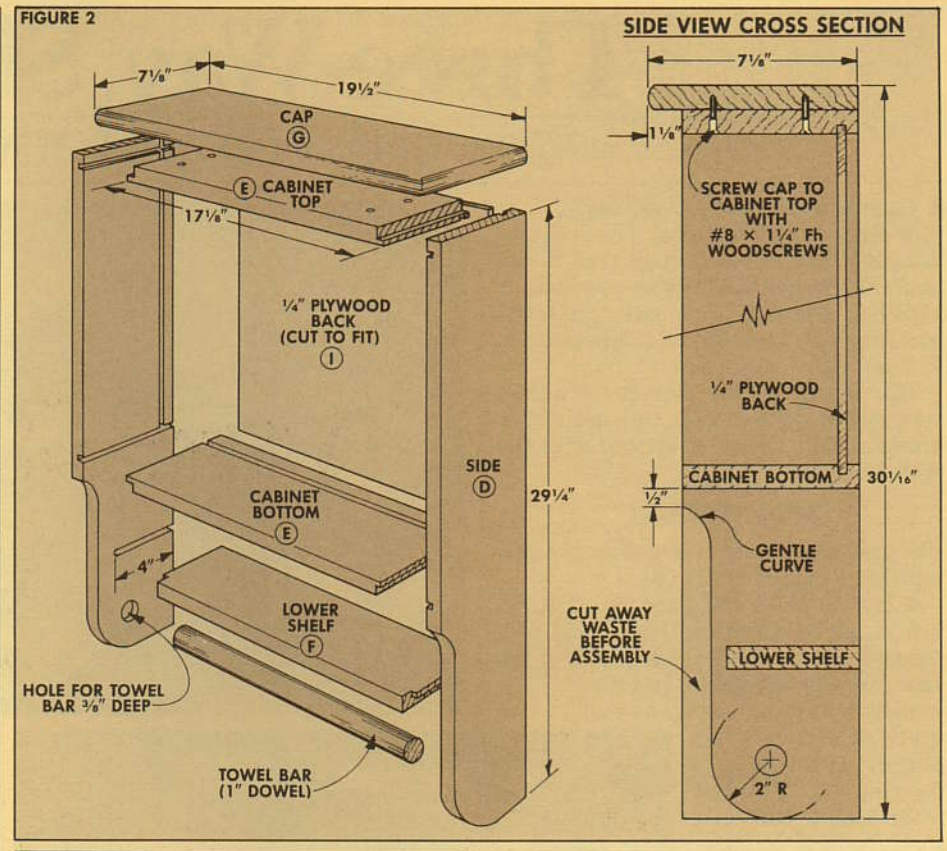

FIGURE 3

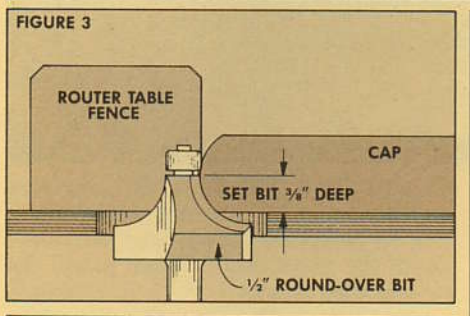

FIGURE 4

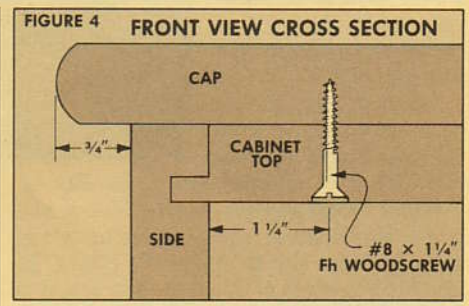

FIGURE 5

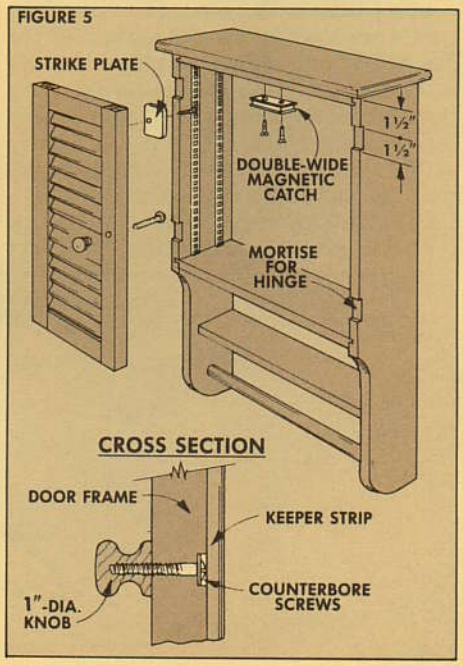

FIGURE 6

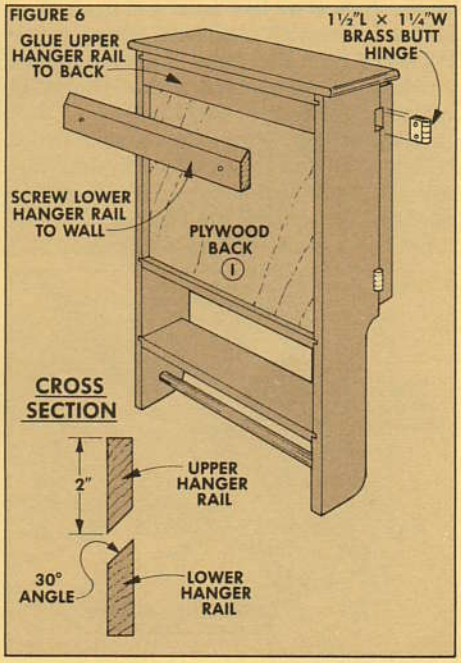

Three-Way Shelf

FOR MUGS, COATS OR TOWELS

A place to hang your hat and coat . . . or your mug . . . or your towel. The design of this shelf is flexible enough that it can easily be changed to a hallway coat rack, or a kitchen mug rack, or a bathroom towel bar. And it's also designed to break down so it can move with you.

This project has four main parts: a shelf assembly made with slats and cleats, two brackets, and a back. I started with the shelf assembly.

SHELF ASSEMBLY

The shelf is made up of five slats (A) held together by three cleats (B).

SLATS. To make the slats (A), first rip five pieces of 4/4 stock (13/16" thick) to a common width of 1¾". The length of the slats can vary depending on your needs. I wanted to be able to hang the shelf on two wall studs (16" on center). So I did a little figuring to determine what length the slats would have to be to locate the brackets 32" on center and came up with a length of 37¾".

After cutting the slats to length, round over the top edges of each slat with a ¼" round-over bit, see Fig. 3.

MARK POSITION OF HOLES. Once the edges are routed, three screwholes are drilled in each slat to attach the cleats. To mark the location of these screwholes, line up the ends of all five slats and draw lines across them with a square. Draw a line 1¾" from each end (this will position the brackets 32" on center), and at the exact center of the length, see Fig. 3.

CROSSLINES. Next, draw crosslines centered on the width of each slat. The easiest way to locate the center is with a combination square, see Fig. 1.

Set the square for just a smidgeon less than half the width of a slat (⅞"), measure in from each edge, and put marks. Splitting the difference between the marks will locate the exact center. Then punch the centers with an awl.

DRILL HOLES. The screws at each of the points are sunk below the surface of the slat and covered with wood plugs, see Fig. 3. To drill the holes for the screws, first counterbore a ½"-dia. hole ¼" deep at each intersecting point. Then a 3/16" hole is drilled the rest of the way through to accept the shank of a #8 flathead screw.

CLEATS. With the slats completed, work can begin on the cleats (B). Since the cleats are all the same length and one end is rounded over on all of them, I found it easiest to layout all three cleats on a single 5" wide board, see Fig. 2. Cut the board to a finished length of 9¼", and then round over one edge on one end with a ¼" round-over bit.

MARK PILOT HOLES. Before cutting the cleats apart, mark the location of the pilot hole lines for the screws. First draw a line

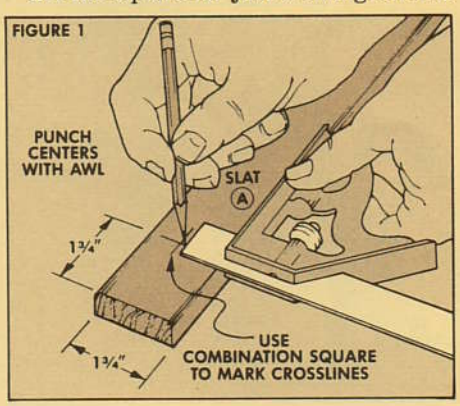

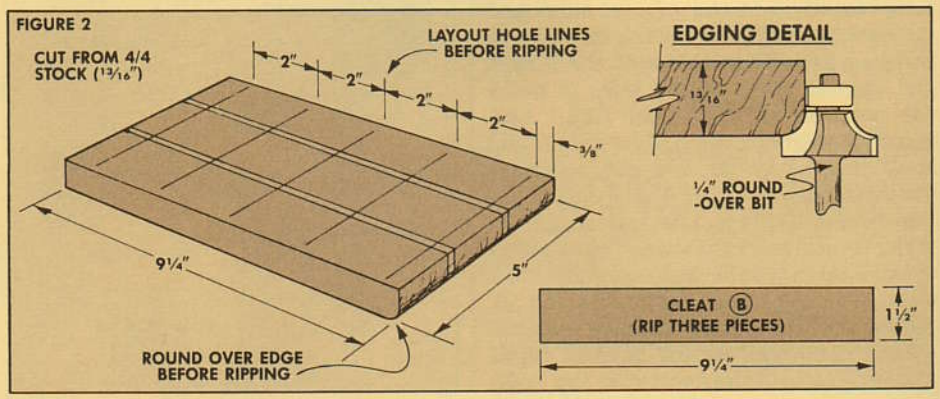

⅜" back from the front edge (on the opposite face from the rounded edge). Then draw four more lines 2" apart.

Now, the three cleats can be ripped 1½" wide. To mark the location of the pilot holes, draw crosslines centered on the width of each cleat using the same combination square method that was used with the slats. Finally, center punch each point with an awl and use a 3/32" bit to drill a ⅜"-deep pilot hole at each point.

ASSEMBLY. With the holes drilled in both the slats and cleats, assembly can begin. Start by screwing (#8 x 1" flathead screws) and gluing the *two outside cleats* to the first and last slats, see Fig. 3. Make sure this partial assembly is square. Then screw and glue the remaining slats and cleats together, checking the assembly each time a new slat is added to make sure it's square.

The final step on the shelf assembly is to glue ½"-dia. plugs into the counterbores. Then chisel or cut them off, and sand flush with the surface of the slat.

BRACKETS

The completed shelf assembly rests on two brackets (C). Both brackets are cut out of a single 9" x 15" blank made from glued-up stock, see Fig. 4.

After the blank is squared up, lay out a cardboard template as shown in Figure 4. Then use the template to trace two brackets onto the blank. After cutting them out, file and sand the curves to finished shape.

If you're including the towel bar in the design, drill a 1"-dia. hole, ½" deep at the location shown in Fig. 4.

MORTISE FOR KEYHOLE HANGER. The shelves are held on the wall with two nifty little metal keyhole hangers (see Sources, page 24). To hold a hanger in each bracket, a 3/16"-deep, 9/16"-wide mortise is routed on the back edge, see Fig. 5. Rout the mortise by making two passes with a ½" straight bit on a router table or with a hand-held router and edge guide.

After the mortise is routed, a section of the slot needs to be drilled out to accept the head of the screw that will be in the wall. To do this, drill two ⅜" holes side-by-side and then chisel out the waste between the holes, see Fig. 6.

Finally, screw the keyhole hanger in the mortise with two No. 8 x ¾" screws, see Fig. 7.

STOPPED RABBET. After the mortises for the hangers are complete, a stopped rabbet is routed on the inside back edge of each bracket to accept the back (D), see Fig. 8.

Since the stopped rabbet is to be ⅜" wide and ⅝" deep, a ⅜" rabbeting bit can be used to cut it in two passes, see Steps 1 and 2 in Fig. 8. Start and stop the cut just a bit short of the end lines and finish by cleaning it up with a sharp chisel.

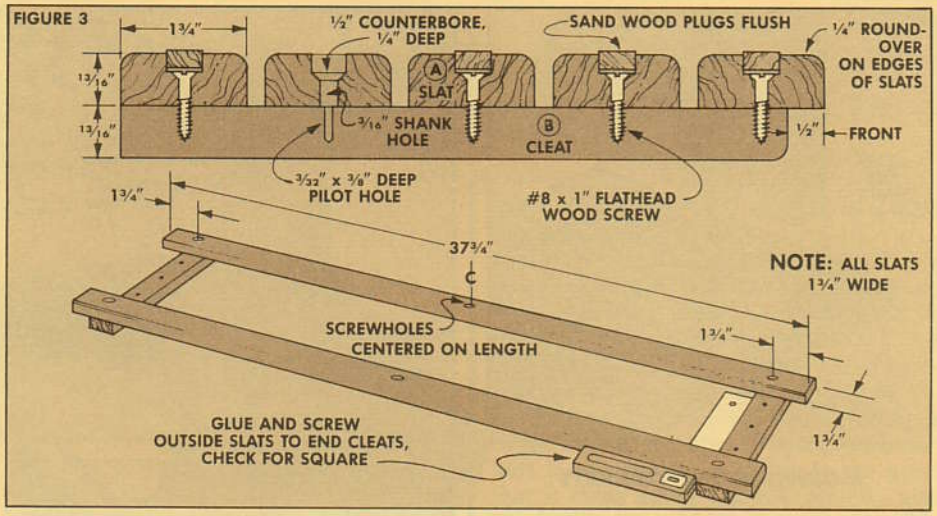

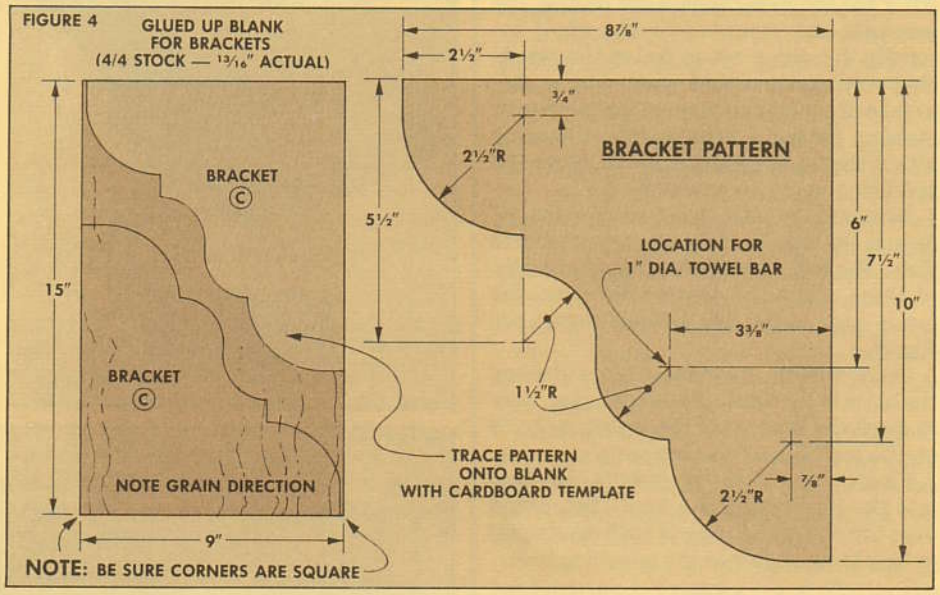

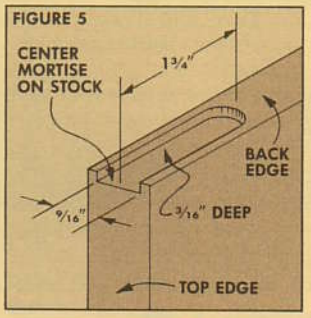

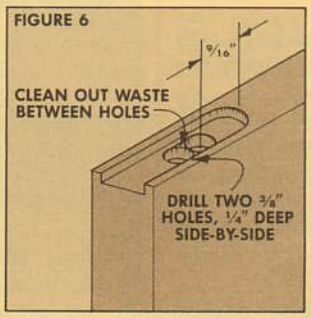

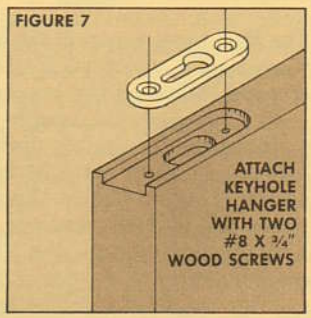

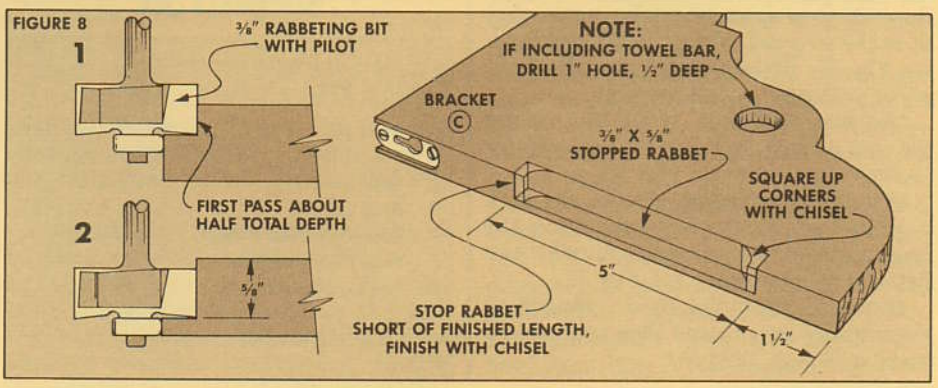

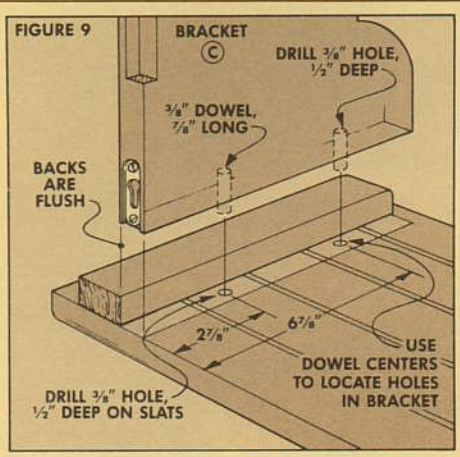

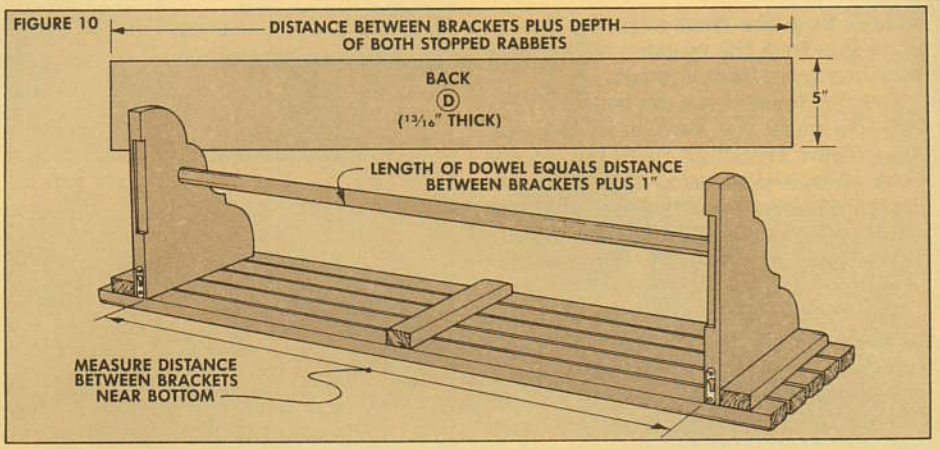

MOUNTING THE BRACKETS

After the stopped rabbets are routed, the brackets are mounted to the shelf assembly. I decided not to fasten the brackets permanently since I wanted to be able to take the whole unit apart for moving or storage. Rather, I used two short locating pins in the top of each bracket to locate and stabilize the entire assembly.

To mount the pins, drill two 3/8" holes, 1/2" deep in the bottom of the second and fourth slats. The holes are centered on the widths of these slats and located 3/8" from the inside edge of the two outside cleats, see Fig. 9.

USING DOWEL CENTERS. After drilling the holes in the slats, use 3/8" dowel centers to mark the location of the matching holes on the top edge of the brackets.

Finally, glue two 3/8" dowels, 7/8" long into the top of each bracket. Then round over the end of each dowel with sandpaper to help them slide into the matching holes.

BACK

The final piece to cut is the back (D). It's ripped to a width of 5" (to match the stopped rabbet on the bracket).

To determine the length of the back, turn the shelf assembly upside down and hold the brackets straight up against the cleats. Then measure the distance between the brackets and add the depth of both stopped rabbets, see Fig. 10. In my case this came to a total of 32 3/8".

After the back is cut to length, rabbet the ends to produce 3/8" thick tongues that fit in the stopped rabbets in the brackets, see Fig. 11. Finally, round over the front edges with a 1/4" round-over bit.

LOCATING THE PEGS. If you are making the coat or mug rack, possible layouts for the holes are shown in Fig. 13.

ATTACHING THE BACK. Finally, the back is placed in the stopped rabbets in the brackets and holes are drilled for #8 x 1 1/4" flathead wood screws, see Fig. 12.

FINISH. To finish the shelf, I sanded all the surfaces smooth and then applied two coats of Hope's Tung Oil.

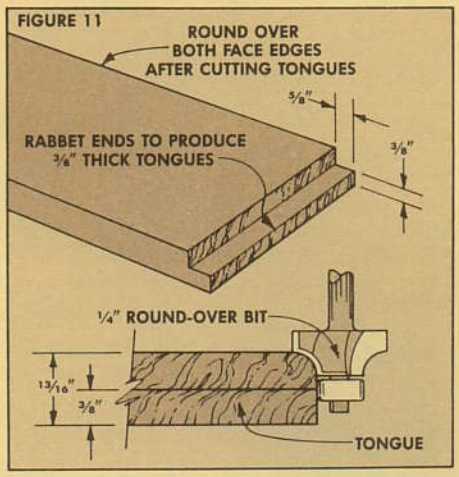

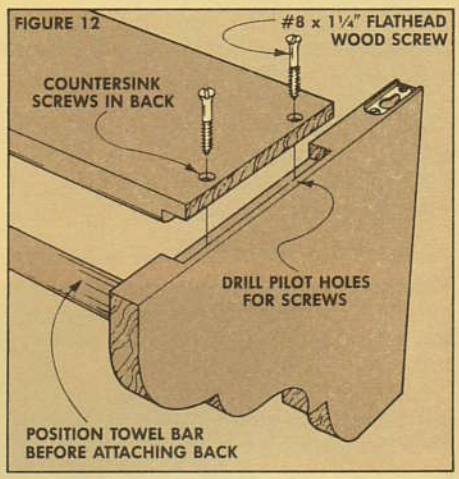

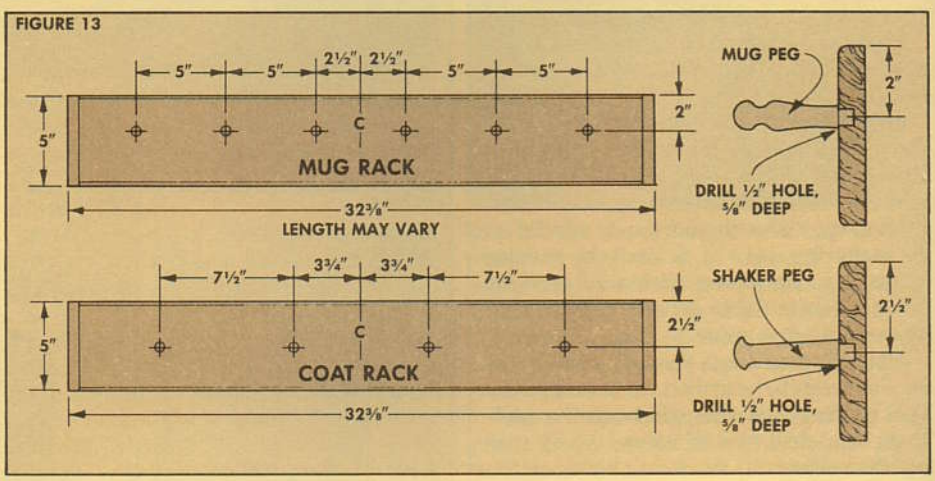

MATERIALS LIST

Overall Dimensions:
37 3/4" w x 9 3/4" d x 10 3/4" h

A	Slats (5)	13/16 x 1 3/4 - 37 3/4
B	Cleats (3)	13/16 x 1 1/2 - 9 1/4
C	Brackets (2)	13/16 x 8 7/8 - 10
D	Back (1)	13/16 x 5 - 32 3/8
E	Dowel (for Towel Bar)	1" dia x 32 1/8"
F	Mug Rack Pegs (6)	3/4" dia. x 3 3/8"
G	Shaker Pegs (4)	7/8" dia. x 3 3/8"

CUTTING DIAGRAM

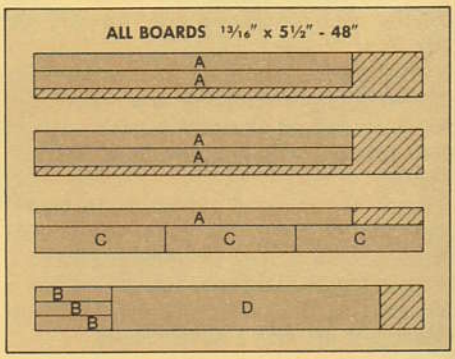

Router Bits

WHICH ROUT TO TAKE

Back in *Woodsmith* No. 31 we ran an article about buying routers. To compare the routers, we looked at several features. But there was one part of the router we didn't discuss — and it's probably the most important part of the whole routing operation: the bit.

In fact, the quality of the bit is probably more important than the router itself. The router, after all, just provides the power, the bit does all the work. Which means that the quality of the cut is very dependent on the quality of the bit.

So, what are the best bits to buy? Or, more to the point, should you get a cheap set of high speed steel bits from Sears (on sale), or spend the money on carbide-tipped bits?

Almost every woodworker I know has been tempted into buying one of the sets from Sears. The bits are downright cheap, and when they're on sale, it's hard to pass up buying the set.

But are they worth it? In some cases, I'd have to say, yes.

Com'on, you've got to be kidding. How can you seriously recommend those cheap bits? They're bearly sharp enough to cut soft butter, they burn up the first time you use them, and they're the kind where you have to screw the bit and the pilot to an interchangeable arbor.

Right. I'm not saying they're the best bits in the world. I don't even think Sears would try to imply that. But they are a cheap set to get started with. If you don't use them much, they'll last forever without a very big investment.

The ones that do get used will probably burn up fairly quickly and they can be replaced with better quality carbide-tipped bits. Of course, that's when you have to get serious about buying router bits.

THE CHOICES

Either way, once you've decided to move up, getting quality — the right kind of quality — in a router bit is important. Which is to say, just because the bit is expensive or has carbide tips doesn't mean it's the best choice.

HIGH SPEED STEEL. The first choice to make when looking at router bits is between bits made out of high speed steel or bits that are tipped with tungsten carbide. The biggest advantage of high speed steel (HSS) bits is cost. They're generally about one-third the cost of carbide bits.

But it's wrong to think of all HSS bits as cheap, throw-away bits. Bosch, Porter-Cable, and Hanson (to name three) make

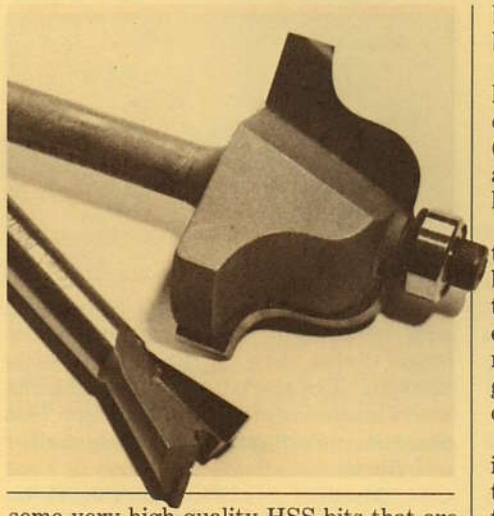

some very high quality HSS bits that are incredibly sharp. In fact, high speed steel will produce a sharper edge than carbide. (Unfortunately, it doesn't last very long.)

These bits are a good choice in two circumstances: when you're working with soft woods, or when you need a specialty bit that will receive only limited use.

However, it's also easy to get into a price/benefit trap with the HSS bits. Since carbide bits cost about three times that of HSS bits, it's easy to rationalize: "I can buy three high-speed steel bits, use them until they wear out and still be ahead of the game over carbide bits."

The problem is that in some applications, HSS bits wear out very quickly. They tend to dull quickly when used on hardwoods and can burn up when used to rout plywood or particle board.

Shop Note: Plywood and particle board are especially hard on router bits of any kind. The adhesive used to make plywood is very hard and tends to dull the cutting edges of HSS bits very quickly.

This, in turn, creates another problem: heat. As the bit becomes dull it heats up faster. The heat can become great enough to actually draw the temper in the steel (you can see it turn blue).

Since there's a natural resistance to throwing away any tool, the dull HSS bits tend to be used beyond the point of immediate frustration — when the bit immediately burns the wood and burns itself up.

CARBIDE-TIPPED BITS. The alternative is carbide-tipped bits. Admittedly, the cost of carbide bits is enough to make you think twice before buying. However, if you're working consistently with hardwoods, or abrasive materials like plywood, particle board, or plastic laminates, carbide-tipped bits are the way to go.

The cutting edge on carbide-tipped bits holds up longer than high speed steel because it's an extremely hard material (close to the hardness of diamonds) and is also less susceptible to the effects of overheating (losing it's temper).

However, there are some disadvantages to carbide. In addition to being hard, carbide is also brittle — brittle to the point that it chips easily. Carbide bits are also expensive. And since we're talking about no small investment in carbide router bits, getting your money's worth quickly becomes important. What do you look for?

THICKNESS OF CARBIDE. One of the first indications of quality (or lack of it) is the thickness of the carbide tip. The thicker the carbide, the more times it can be sharpened before it needs to be replaced.

That's the theory anyway. In reality, carbide bits are not resharpened that often. So the thickness of the carbide is really a matter of "it's the thought that counts." Usually, thicker carbide indicates the quality and care the manufacturer puts into making his bits.

GRINDER MARKS. One of the primary indications of quality is how well the bit is sharpened. Look closely for a smooth initial sharpening, especially on curved surfaces that cannot be retouched.

If you can see grinding marks, the bit has been quickly rough ground. Better bits will appear and feel smooth. And taking this to the extreme, Bosch and Stanley offer Super Sharp bits that have been ground to a mirror finish.

ONE-PIECE BITS vs. MULTI-PIECE BITS. Most carbide bits are one piece: the cutting profile is permanently attached to the shank. But Sears, Porter-Cable and Stanley make multi-piece carbide-tipped bits. These have a standard arbor that will accept different cutting heads. The idea is that it's less expensive to buy just one arbor and then fit several cutting heads with different profiles on it.

We still have several Sears interchangeable bits around the shop. At least parts of them. The various heads, nuts, washers, bushings, and pilots have managed to find hiding places.

Besides the hassle of keeping track of all these small parts, I have one major objection to these bits. The pilots have come dangerously loose in operation. For this reason, I've switched to one-piece bits.

BRAND NAMES. Okay, let's get down to the bottom line. Is there a particular brand

of router bits that's better than the others? Which is best: Bosch, Porter-Cable, Freud, Black and Decker, or Sears?

This is one of the few times when talking about woodworking tools that the choice between brands is almost impossible to make. It's kind of like choosing between Coke and Pepsi. There are some slight differences, but when you're looking at brand name carbide-tipped router bits, a bit is a bit.

For the most part, I look at price. Beyond that, it's a matter of selection or variety. Everybody carries straight bits and round-over bits, but each manufacturer has some specialty profiles or sizes that the others might not carry.

RECOMMENDED BITS

At the beginning of this article, I was talking about the relative merits of buying a cheap set of high speed steel bits versus buying carbide bits right from the start.

Because of the cost involved, the biggest problem with buying carbide bits is knowing which ones you're likely to use often enough to justify the price of carbide. I've been trapped both ways in the past.

At first, I bought only HSS bits. Then when I discovered the merits of carbide, I decided that was the only way to go. But in some cases, I have to admit that I think I wasted money on some specialty carbide bits that I wound up using only a few times when a HSS bit would have done just fine.

Okay, which bits should be carbide and which ones HSS? In fact, if you're going to buy carbide bits, which ones should be considered first?

There are a few bits I would consider part of a primary set for building the kind of projects we show in *Woodsmith*. But buying them as a complete set might not be practical because of the high initial cost.

Just to give some indication of the kind of investment we're talking about, we've listed the "average cost" of each bit. (This "average cost" was obtained from five manufacturers: Black and Decker, Bosch, Freud, Porter-Cable, and Sears "Professional".)

STRAIGHT BITS

First on the list is a collection of at least three straight bits, plus two more if you want a complete set. Listed in the order of most use, they are:

¼" STRAIGHT BIT, CARBIDE-TIPPED, 2 FLUTE. (Average cost: $11.31). This is perhaps the most basic bit and it gets considerable use in our shop. It can be used for cutting dadoes, rabbets, grooves, and mortises for hinges.

But for being such a basic bit, there are several controversies associated with it. First, is it best to get a ¼" straight bit with one flute or two?

Single flute bits have only one cutting edge and are designed for maximum chip clearance. This means you can feed the router faster through the workpiece but the cut will be fairly rough. Double flute bits give a smoother cut but there will be more resistance so you have to feed it a little slower.

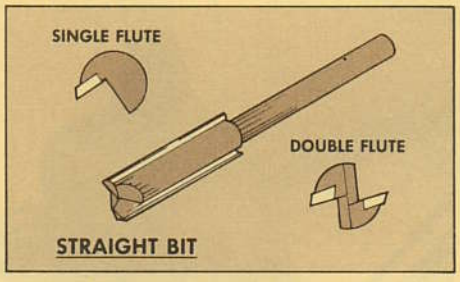

The other decision that has to be made with ¼" straight bits is the length: the longer the bit, the greater the chance of its breaking. I've started using straight bits with a maximum of 1" of cutting edge. This decreases breakage, along with chatter and vibration.

⅛" STRAIGHT BIT, HIGH SPEED STEEL. (Average cost: $2.43). This small straight bit has some obvious uses for detail work, like routing recesses for marquetry inlays (see *Woodsmith* No. 28).

But it would seem that a ⅛" straight bit is far too small for general woodworking. Exactly the opposite is true. This bit is almost mandatory in two common circumstances.

A ⅛" bit is needed when you have to cut a groove or dado for ¼" *hardwood* plywood. Although construction (fir) plywood is generally very close to ¼" thick, almost all the *hardwood* plywood we've worked with is considerably less than ¼" thick. So, a ⅛" straight bit is needed to cut grooves and dadoes in two passes to fit the actual thickness of the plywood.

The other primary use for a ⅛" straight bit is for cutting the grooves for spline joints. We've used this type of joint on several projects to join the ends of mitered pieces to form a frame. (Refer to *Woodsmith* No. 21.) The ⅛" bit seems easier to control and produces a better groove than working with a larger ¼" bit.

This is one bit where it's difficult to decide between high speed steel or carbide. I use it enough to justify carbide, but the HSS version is cheap enough (average cost: $2.43) to make it disposable when it gets dull.

½" STRAIGHT BIT, CARBIDE-TIPPED. (Average cost: $12.93). After the ¼" and ⅛" straight bits, it's a tough choice between the ⅜" and ½" sizes. We probably use the ½" bit a little more often.

It's used a great deal on the router table to cut rabbets and grooves. Even when I have to cut a ¼"-wide rabbet on the edge of a board, I use the ½" bit because it produces a smoother cut with less chipping.

Also, when cutting ¾"-wide dadoes or grooves, most of the time it's better to make two passes with a ½" bit, sneaking up on the width for a perfect fit, rather than one pass with a ¾" bit.

⅜" STRAIGHT BIT AND ¾" STRAIGHT BIT, CARBIDE-TIPPED. (Average cost: $12.04 and $14.58). If you're working within a tight budget for the shop, ⅜" and ¾" bits can be added as needed. However, I would probably not mess around with high speed steel first and replacing with carbide. I'd go right to carbide on these straight bits.

This is especially true on the large ¾" straight bit. It takes out such a chunk with each pass that it tends to heat up quickly. Carbide is needed to withstand this heat. Also this size bit is often used for cutting grooves in plywood. And since plywood tends to destroy HSS bits, carbide is about the only way to go.

ROUND-OVER BITS

Also included in the primary set of bits is a selection of round-over bits. Before we go any further, there's a problem to address: what to call these bits.

They generally go by four different names: round-over, rounding over, corner round and quarter round. In addition, if a smaller pilot is used so a second shoulder can be produced, they can be called beading bits.

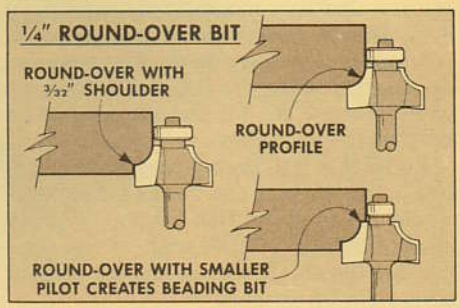

One note about these bits: the pilot. Round-over bits come with a pilot to guide the bit. But there are two kinds of pilots. Most HHS bits (and some carbide bits) come with fixed pilots that rotate at the same speed as the bit. This means the pilot rubs against the workpiece at high speed and burns the edge. The fixed pilot also tends to collect resin from the wood which compounds the burning problem.

This is one of the primary reasons for frustration with HSS bits. (Note: There's a replacement ball bearing pilot for the Sears HSS bits that's well worth buying.) On the other hand, most carbide bits come with ball bearing pilots that virtually eliminate burned edges.

¼" ROUND-OVER BIT, CARBIDE-TIPPED. (Average cost: $24.92). Of all the round-over bits, the ¼" size is the one that gets the most use in our shop. When working on contemporary pieces, it's used to round the edges. While on period furniture, it can be

set for a slightly deeper cut to include a shoulder, see drawing.

½" ROUND-OVER BIT, CARBIDE-TIPPED. (Average cost: $29.22). A ½" round-over bit is also quite useful, but it is, without a doubt, quite expensive. At an average cost of almost $30, this is one time when you might think twice about the merits of carbide vs. high speed steel. I would still choose carbide.

We've come to use the ½" round-over bit for two profiles that seem to find their way into a number of projects. The first is a softened bullnose profile. Rather than using a ⅜" bit on both edges to produce a full bullnose (a half-round edge), a ½" bit is set to a shallow depth-of-cut to produce a softer curve and a very pleasant edge, see drawing.

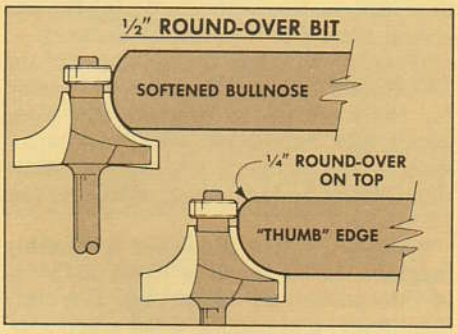

Another profile we like is what we call the "thumb" profile. Here a ½" round-over bit is used on the bottom half of the edge, combined with a ¼" round-over bit on the top half, see drawing.

SPECIALTY BITS

In addition to the straight bits and round-over bits listed above, there are four specialty bits worth considering as part of a primary set.

½" DOVETAIL BIT, CARBIDE-TIPPED. (Average cost: $14.55.) Unless you're a fanatic for making hand-cut dovetails, a ½" dovetail bit is mighty handy for making dovetail drawers. Of course, you need the dovetail routing fixture to go along with it, but the whole set-up is worth having. In addition to cutting drawer joints, this bit is also used to cut a dovetail tongue and groove.

⅜" RABBETING BIT, CARBIDE-TIPPED. (Average cost: $24.32). Although almost every project we build has a rabbet on it somewhere, we seldom use a rabbeting bit. One reason is the limitation of the ⅜" width of cut. Another problem is with tearout on the bottom of the cut. (See Talking Shop, page 22 for more on this.)

But when you need to cut a rabbet on the inside edge of an assembled frame, particularly a curved frame, a rabbeting bit becomes indispensible.

¼" ROMAN OGEE BIT, CARBIDE-TIPPED. (Average cost: $31.84). There are a few decorative bits that are worth the investment. My first choice would be a Roman ogee bit.

The carbide version of these bits is very expensive, and you have to ask how often you're going to use the ogee profile to dress up an edge. But in this case, the bit can be used in other ways, see drawing.

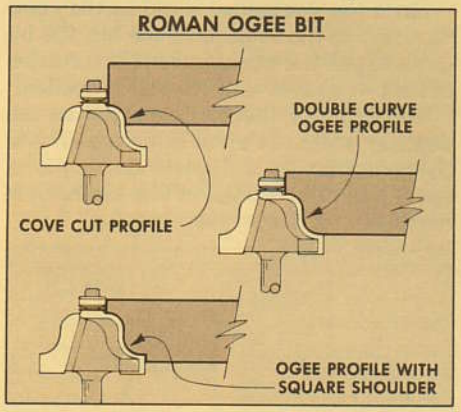

Depending on the depth of cut, it can be used to produce a small cove cut. By increasing the depth of cut, it produces the double curve ogee profile. And by lowering it to full depth it adds a square shoulder to the ogee profile.

"V" GROOVE, HIGH SPEED STEEL. (Average cost: $6.67). The "V" groove is another decorative bit that I would add to the group. Although its primary use is to cut V-grooves, it can also be used (on a router table) to chamfer edges. Although we use this bit quite often, we've been able to get by with the high speed steel version.

CONCLUSIONS. Okay, what about slotting cutters and core box bits? No two woodworkers' lists of recommended router bits will ever be the same. But I've tried to include all the bits we use on a more or less *regular* basis for the projects shown in *Woodsmith*.

Sure there are times when we use a truly special bit (a panel raising bit, a slotting cutter, or a keyhole bit, for example) for specific projects. At that point it's a matter deciding the value of the bit for that particular project. (There's usually some way I can justify spending money on woodworking tools.)

But no matter what style of bit or whether it's HSS or carbide-tipped, router bits only do their job for two basic reasons: the speed at which they turn, and the fact they're sharp. The router provides the speed. But keeping them clean and sharp is another problem.

CARE AND SHARPENING

Just like saw blades, router bits collect pitch and resin as they're used. This usually causes burned edges and can impede the cutting action of the bit.

Fortunately, it doesn't take much to clean router bits. I soak them in Sears Gum and Pitch Remover for a while and wipe them clean with 0000 steel wool.

One note here: When cleaning bits with ball bearing pilots, remove the pilot before dipping the bit in the cleaner. The particles of dissolved resin can seep into the bearing and gum it up so badly it won't turn at all.

SHARPENING. When it comes to the subject of sharpening router bits, I have a few thoughts that run contrary to the way I usually work with and maintain tools.

I usually try to learn how to sharpen the tools and keep them in good working order. But when it comes to router bits, I've developed some second thoughts about sharpening them in the shop.

Carbide bits can be sharpened with a diamond hone called Eze-Lap (see Sources, p. 24). These hones are like emery boards except they're coated with diamond particles.

I've sharpened a few bits using the medium and fine-grit diamond hones. But to be honest, I'm not sure this is the best way to approach sharpening carbide bits.

There are three basic problems: First, some bits (particularly small-diameter straight bits) don't have enough clearance in the flute to use the diamond hone.

Second, on the bits that can be sharpened, the surface is very small, which makes it difficult to control the hone to make sure you're applying even pressure so one area is not being rounded over.

And third, it's very difficult to make sure the same amount of material is being removed from each flute (cutting edge).

Note: When using a diamond hone, only work on the face (flat) side of the carbide tip. The outer edge should not be honed because the clearance angle could very easily get messed up (and the bit won't cut properly). Also, on bits with curved edges, it's almost impossible to keep the same shape on both flutes (cutting edges). So, only hone the face (flat) side.

Besides the diamond hones, I've also tried using the Sears router bit sharpening attachment — it's excellent for raising your blood pressure, but takes enormous patience to get it set up to actually sharpen router bits.

There's a better way: When the bit starts getting dull, I take it to a professional shop to have it sharpened. The shop we go to charges about $5 to sharpen a carbide-tipped bit, and they have the equipment to do the job right. (They use a 400-grit diamond wheel, and the bits come back extremely sharp — in much better condition than I could produce by hand.)

CONCLUSIONS. When the router bits are sharp, they will do their job. In fact, when I'm using a nice sharp bit, I've come to think of the bit as the tool and the router as the accessory. And the nicest part of all this is that it only takes a limited number of bits to do a lot of work — an investment that's well worth it.

Talking Shop

AN OPEN FORUM FOR COMMENTS AND QUESTIONS

ROUTER ROTATION

In Woodsmith *No. 36, there was an article in Shop Notes on routing rabbets using the router table. In the article, you mentioned that you had no idea why making a light, backwards scoring pass produced a very smooth cut on the exposed edge of the rabbet.*

There's a very good reason why this procedure produces such a smooth cut. In regular or forward routing, the workpiece is fed into the router bit in a direction opposite the rotation of the bit. In this case, the cutter is coming from the bottom of the cut and is pushing the chip up to the surface. (This is called up milling *in metal work.)*

The problem is that the material along the edge of the piece isn't supported. This allows the chips being pushed ahead of the cutter to break out, or splinter the material along the edge before the cutter reaches the surface and can make a clean cut. (Ed. See drawing.)

When making a backward cut, the workpiece is fed in the same *direction as the rotation of the bit (this is called* down milling*), and the cutting action is just the opposite. Feeding in this direction, the cutter is cutting downward into the wood along the exposed edge, and the material being removed is always supported by the material behind it.*

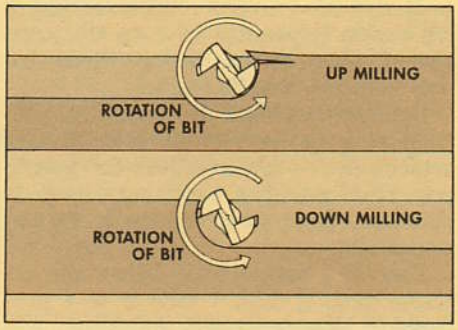

Down milling always produces a smoother cut, and this is why a scoring pass in the opposite direction produces such a clean cut.

R. J. Crizer
San Francisco, California

Editor's Note: We like to use this down milling technique to produce a smooth scoring cut when cutting rabbets on the edge of a workpiece. However, there is a drawback when making this type of cut on a router table.

Since the workpiece is fed in the same direction as the rotation of the bit, the bit tends to pull the workpiece in the direction of feed — almost as if it's self-propelled.

The force of the bit increases as the depth or width of the cut is increased — to the point that the workpiece can be pulled out of your hands (kind of like kickback in reverse) — a dangerous situation.

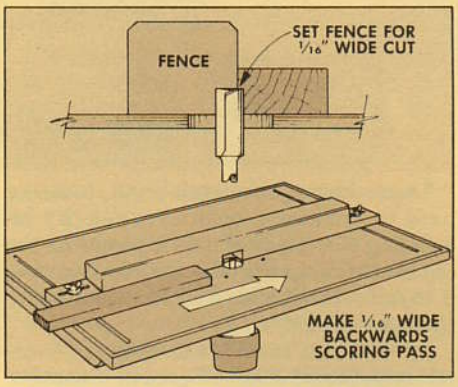

To reduce the amount of force and control the cut on the router table, only a light scoring pass should be made in this "down milling" direction. Set the bit to make a cut at full depth, but adjust the *width* of the cut to only 1/16" or so, see drawing.

This way there's very little material for the bit to grab, and the workpiece can easily be controlled to produce a clean edge. Then after making the "down milling" scoring pass, adjust the fence to cut the rabbet to full width in the normal direction (against the rotation of the bit).

SAMPLE LUMBER KITS

In *Woodsmith* No. 34, we ran a segment in Talking Shop about wood sample kits being offered for sale by the International Wood Collectors Society (IWCS). Since then, we've received several letters from readers who, after several months, still haven't received their lumber kits.

I called Mike Hanley, the current Secretary/Treasurer of the IWCS, to find out why there was such a long delay. It turns out that most of the delay was caused by the high level of response from our article (four to five times as many orders as they usually receive in an entire year).

To make matters worse, only one person — Damon Vincent — cuts, assembles, and packages the sample kits. And like everyone associated with the IWCS, Damon volunteers his time after work and on the weekends.

According to Damon, the flood of orders was more than he could keep up with in his spare time. And to top it off, he ran out of material. Since the lumber used in the sample kits is donated by IWCS members, the call went out to members for more lumber.

Finally, enough lumber has been collected for the kits, and Damon assures us they're keeping up with the orders. All future orders for the $15.00, 31-piece sample kits should be sent directly to Damon Vincent, School of the Ozarks, Point Lookout, MO 65726. He also wanted us to mention that anyone ordering the kits should allow 6 to 8 weeks for delivery.

We'd like to thank the members of the IWCS, and Damon Vincent in particular, for their efforts to produce the wood sample kits. Sample kits are almost impossible to find anymore, and we appreciate their efforts to keep them available, and affordable.

The IWCS also publishes a monthly magazine called *World of Wood* that's full of information on "collecting, correctly identifying, and naming wood specimens, and the use of wood in creative craftsmanship". World of Wood is mailed free to all *members* of the IWCS.

To join the International Wood Collectors Society, send $13.50 for a one-year membership to: Michael Hanley, IWCS Secretary-Treasurer, W.63, N.653 Washington Ave., Cedarburg, Wisconsin 53012.

FOUR QUARTERS

After almost every issue, we receive a small stack of letters asking about the 4/4, 5/4, and 8/4 designations used to indicate the thickness of hardwood lumber.

These designations are similar to those used on softwood (construction) lumber to indicate thickness. A 2x4 starts out a full 2" thick in its rough state. But after it's surfaced and dried, the actual thickness is 1½".

The same goes for hardwood lumber — except the designations are different. Hardwood lumber is designated by thickness given in "quarters" (¼" increments). So, 4/4 (four-quarter) stock is 1" thick, 5/4 (five-quarter) is 1¼", etc.

So far, so good. But when hardwood lumber is surfaced to remove the rough saw marks, things tend to get very confusing as to what the final thickness should be. Guidelines have been published by the National Hardwood Lumber Association (NHLA) for the surfaced thickness of hardwood lumber, see Chart. In the case of 4/4 stock, it's surfaced to a final thickness of 13/16".

However, the thickness specifications listed by the NHLA are guidelines mostly intended for the furniture industry. Local lumber yards or retail outlets may or may not follow these guidelines.

Some retail outlets surface 4/4 stock to 13/16" according to the guidelines. Others have settled on a standard of 25/32" because they've found that this setting is more likely to clean up the entire surface of the boards, and yields more saleable lumber.

To add to the confusion, some retail outlets surface hardwood lumber down to 3/4" because that's what everyone is used to on softwood lumber.

ROUGH THICKNESS	"QUARTER" DESIGNATION	SURFACED THICKNESS
5/8"	5/8"*	7/16"
3/4"	3/4"*	9/16"
1"	4/4	13/16"
1 1/4"	5/4	1 1/16"
1 1/2"	6/4	1 5/16"
2"	8/4	1 3/4"
*ROUGH LUMBER LESS THAN 1" IS EXPRESSED IN INCHES		

In *Woodsmith*, all of the dimensions given in the plans are based on the NHLA standard thicknesses. We usually give the "quarter" designation followed by the NHLA standard thickness — 4/4 (13/16" actual) — with the understanding that the thickness of the lumber you're working with may vary from the standard.

ONE-MINUTE GLUING

I have a question related to the article "Miter with Open Spline" in Woodsmith *No. 36. In this article, you said to glue the miters together by holding the pieces together for* one minute. *I would like to know the specific glue you are using that allows you to do this.*

I'm unfamiliar with a glue that would allow me to complete the handling and cutting of the frame as you instructed after only one minute of setting time.

Chuck Seipp
Grand Rapids, Minnesota

The comment on clamping the frame with hand pressure for only one minute has raised more than a few eyebrows. But there's no magic to the glue . . . we use plain old yellow (aliphatic resin) glue (either Franklin's Titebond or Elmer's Carpenters Glue).

The trick is that you're not trying to make a permanent glue joint when you hold the mitered pieces together for one minute. All you need to do is "glue-tack" the miters together so they're aligned when they're placed in the jig to cut the groove for the spline.

One of the advantages of using aliphatic resin glues is that they're formulated to have the "quick grab" necessary for this kind of glue tacking.

Apply a light coat of glue to the mitered surfaces, and rub the two pieces against each other once or twice to work out any excess glue. At first the joint will slip around on the glue, but then it will grab.

When you feel it grab, make sure the miters are aligned. Then hold the joint together with hand pressure for 60 seconds or so, keeping even pressure on the joint for the entire period.

At this point, the joint isn't strong enough to be tossed around the shop, but it will hold long enough to make the cut for the spline. The jig also provides support to the pieces so there's almost no pressure on the joint as the cut is made.

Then when the spline is glued into this groove, it will hold the mitered pieces together. In effect, the spline makes the joint, not the glue on the mitered surfaces.

CUTTING COVES ON A TABLE SAW

I've just received Woodsmith *No. 36 and would like to comment on your technique for cutting coves on a table saw.*

I feel there's a serious mistake in the art, which shows the fence angled on the back *side of the blade. In every other book I've seen, the fence is shown in front of the blade.*

The problem is that when the workpiece is positioned in front of the fence, as shown in your article, the rotation of the saw blade tends to pull the workpiece away from the fence. This means that hand pressure is the only thing preventing the saw blade from throwing the workpiece toward the operator.

By relocating the fence in front of the saw blade, the rotation of the blade pushes the workpiece against the fence. This prevents it from being thrown at the operator, avoiding a potentially serious accident.

Robert Hanson
St. Cloud, Minnesota

We've received several letters from readers pointing out that the fence appears to be in the wrong position in our art. Actually, there wasn't a mistake. We showed the fence behind the blade because we feel this is the best position.

As we were preparing the article on cutting coves, we tested the set up with the fence in *front* of the blade, because as many letters suggested, this is the way it's shown in most books.

But when it came time to cut the cove with the fence in this position, I had problems trying to feed the workpiece into the saw blade, while at the same time keeping it tight against the fence. This requires applying pressure in two different directions: pushing the workpiece forward, and pulling it back to hold it tight against the fence. No matter how many times I tried this method, it always felt very awkward to me.

The method I've used for years is with the fence positioned *behind* the saw blade. Although, in theory, it might seem like the blade would have enough force to pull the workpiece away from the fence, in practice, it doesn't.

In fact, it's not any different than making an ordinary rip cut — except since the depth of cut is only about 1/16" or so, even less hand pressure is needed to push the piece through the blade.

And this, I feel, is the advantage to having the fence behind the blade: the workpiece can be fed by applying pressure in a typical straight-forward direction — just like a rip cut.

This direction feels very comfortable to me. But that's only how I feel. Try it both ways. If it feels better making the cut with the fence in front of the blade, then that's the way to do it.

Other letters we've received suggest using two fences, one on each side of the workpiece to guide it as it's fed into the blade. Here, the problem is that the fences have to be perfectly parallel to each other, and exactly the same distance apart as the width of the workpiece.

Considering how difficult it is to clamp one fence in position, trying to clamp a second fence can be more aggravation than it's worth.

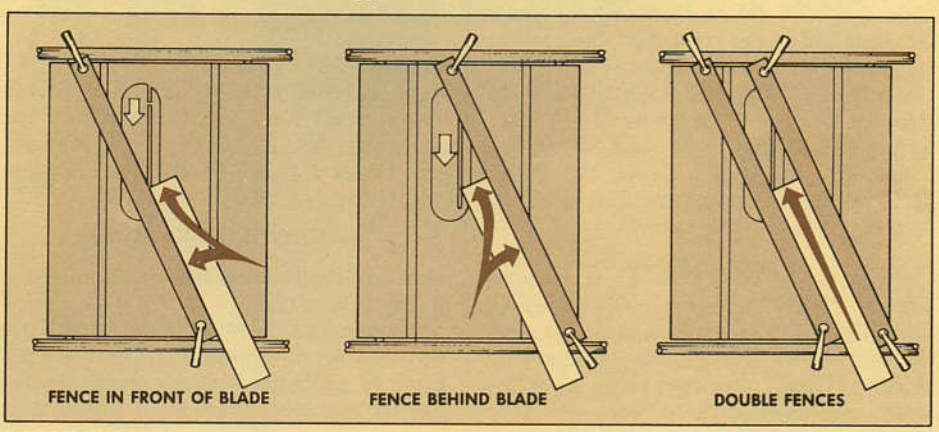

Sources

TV TRAYS/STAND

You can order the hardware for the TV Trays from the following sources:

CONSTANTINE'S, 2050 Eastchester Road, Bronx, NY 10461; 800-223-8087 (Note: $7.50 minimum order. Catalog: $1.00). *Roto-Hinge* (4 hinges needed per tray), ¾" diameter, Order No. ROT34, $2.75 per package of 4.

THE WOODWORKERS' STORE, 21801 Industrial Boulevard, Rogers, MN 55374; (612) 428-4101 (Note: $7.50 minimum cash order. Catalog $2.00). *Wilsonart Decorative Laminate*, Order No. dependent on color (see their special "Kitchen Considerations" catalog), 30" x 96" (enough for four trays, two panels per tray), $36.00. *T-Molding* (for 1/16" kerf), ¾" wide, 12-ft. lengths, (four 12'-lengths needed for four trays), Order by color, No. D2732 (Tan), No. D2734 (Brown), No. D2736 (Black), No. D2738 (White), $2.90 per piece. *1/16" Slot Cutter*, Order No. M8952, $18.95. *2" Plate Casters*, Order No. C1143 (black) or No. C1142 (brown), $16.40 per set of 4. *Flat Top Plugs*, Oak, ⅜", Order No. B1062, $1.50 per 50 (or see information below on plug cutters).

BATHROOM CABINET

You can order all of the hardware for the bathroom cabinet from one source:

THE WOODWORKERS' STORE, (address above). *Brass Butt Hinges* (2 pair), 1½" long, 1¼" wide, Order No. D1224, $1.80 pair. *Round Beech Knobs* (2), 1" dia., Order No. B2501, $.26 each. *Shelf Standards* (4), surface mounted, 24" long, Order No. D9201, $.80 each. *Shelf Supports* (8), Order No. D9150, $.10 each. *Magnetic Catch*, Order No. D2101, $1.75 each.

3-WAY SHELF

You can order all of the hardware for the shelves from one source:

THE WOODWORKERS' STORE, (address above). *Knock Down Fittings* (2), Order No. D3963, $.45 per pack of 2. *Shaker Pegs* (4), Birch, 3⅜" long overall x ⅞" dia., Order No. B1501, $.28 each. *Mug Rack Pegs* (6), Birch, 3⅜" long overall x ¾" dia., Order No. B1520, $.28 each. *Flat Top Plugs* (15), Maple, ½", Order No. B1061 $1.10 per 50 (or see information below on plug cutters).

PLUG CUTTERS

The TV Trays and the 3-Way Shelves require wooden plugs. These can be purchased, but we found it easy to use plug cutters to make our own plugs from the same wood used on the projects.

There are two styles of plug cutters available that fit into any drill or drill press. The traditional style produces a slightly beveled plug that needs to be resawn or broken free after they're drilled. (I sometimes pop them out with a screwdriver). They are available from a variety of sources. One source is Constantine's (address above), Order Nos. ⅜" (95X1207), ½" (95X1207A), ⅝" (95X1207B), $6.95 each.

A newer style automatically ejects the plug from stock ⅝" or less. A set of 3 (⅜", ½" and ⅝") is available from Constantine's, Order No. 48W31, $19.95.

CARBIDE-TIPPED ROUTER BITS

The best place to start looking for the carbide-tipped router bits discussed on pages 19-21 is your local tool dealer. If you can't find them locally, you may want to contact one of the major mail order sources that carry carbide-tipped bits:

GARRETT WADE, 161 Avenue of the Americas, New York, NY 10013; 800-221-2942 (Catalog: $3.00).

MASON & SULLIVAN CO., 586 Higgins Crowel Road, West Yarmouth, MA 02673; (617) 778-1056 (Catalog: $2.00).

MLCS, P.O. Box 53, Rydal, PA 19046; 800-532-2445 Ext. 56.

TREND-LINES, INC., 375A Beacham Street, P.O. Box 6447A, Chelsea, MA 02150; 800-343-3248.

W.S. JENKS & SON, 738 Seventh Street, N.E., Washington, DC 20001; 800-638-6405.

WOODCRAFT SUPPLY, 41 Atlantic Avenue, P.O. Box 4000, Woburn, MA 01888; 800-225-1153 (Catalog: $3.00).

THE WOODWORKERS' STORE, (address above).

WOODWORKER'S SUPPLY OF NEW MEXICO, 5604 Alameda N.E., Albuquerque, NM 87113; 800-645-9292 (Catalog: $2.00).

ZAC PRODUCTS, INC., 533 West 34th Street, New York, NY 10001; 800-522-6622.

DIAMOND HONES

The Eze-Lap Diamond Hones mentioned in the router bit article (p. 21) are available from Garrett Wade (address above). Fine grit, Order No. 15W08.01, $5.95. Medium grit, Order No. 15W08.02, $7.95. Coarse grit, Order No. 15W08.03, $9.95.

WOODWORKING CLUBS

Here are the latest additions to our list of woodworking clubs.

WOODWORKERS OF CENTRAL OHIO. This club has been organized to serve central Ohio. It meets about every six weeks and has 60 members. For more information contact Col. (Ret.) Walter P. Betley, 2687 Wellesley Drive, Columbus, OH 43221.

MIDLAND WOODWORKERS ASSOCIATION. This organization has entered its second year with monthly meetings and a quarterly newsletter. Get more information by contacting Alan T. David, President, Midland Woodworkers Association, P.O. Box 1221, Midland, MI 48640.

KANSAS CITY WOODWORKERS GUILD. David McLamb stopped by our offices to let us know that Kansas City woodworkers were getting together a new guild. If you are interested you can contact David McLamb, President, P.O. Box 11284, Kansas City, MO 64119.

CINCINNATI WOODWORKING CLUB. These woodworkers have been in existence for a little over a year and average 65 members at each meeting. For more information contact Rick Gorman, 7320 Miami Ave., Cincinnati, OH 45243.

SHASTA WOODWORKERS ASSOCIATION. This group offers meetings, field trips, group purchasing, a newsletter, and an annual juried exhibit. Find out more about them by contacting Yosh Sugiyama, Shasta Woodworkers Association, P.O. Box 205, Shasta, CA 96087.

THE WOOD BOX WOODWORKERS GUILD, INC. Harry McVeety reports that this group on the Gulf Coast is beginning its third year with over 100 members. For more information contact Harry McVeety, President, The Wood Box Woodworkers Guild, Inc., 4756 Three Notch Road, Mobile, AL 36619.

Brooklyn, NY. Walter Connolly has been in contact with us a number of times about starting or finding a club in the New York City area. If you are interested, contact him at 1560 73rd Street, Brooklyn, NY 11228.

CLUB ORGANIZATIONAL HELP

In *Woodsmith* No. 33 we asked for information on how to start a woodworking club. The Central Pennsylvania Woodworkers said they found an "Organizational Kit" provided free of charge from Shopsmith, Inc. to be helpful and saved a lot of work. We took a look at this "no cost, no obligation" offer and found it to be full of useful suggestions for starting a club and improving clubs. Included is information on how to get started, enlist members, structure, publicity, newsletters and much more.

For a copy of the kit, write or call, Vince Pax, Manager of Woodworking Club Development, Shopsmith, Inc., 6640 Poe Avenue, Dayton, OH 45414-2591; 800-543-9396.